Contracting and Acquisition

Lessons, Practices, and Programs

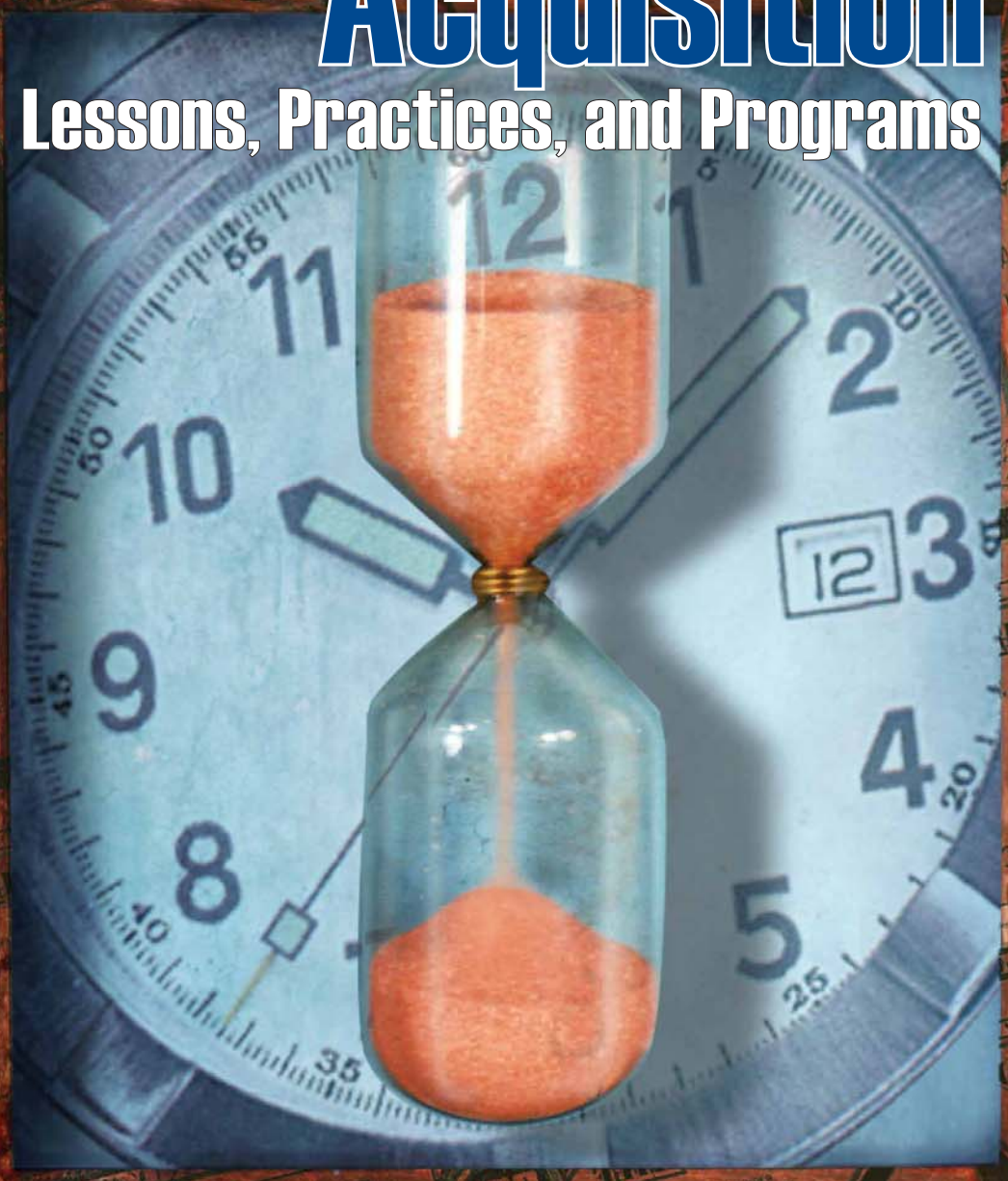

also in this edition:

Flyaway Costs Versus Individual Components of Aircraft: An Analysis
AFMC/XPS Logistics Analysis
XLog21—Purchasing and Supply Chain Management
Excellence in Writing Contest

http://www.aflma.hq.af.mil/lgj/Afjlhome.html

JL

AIR FORCE JOURNAL of LOGISTICS

Volume XXVII,
Number 4
Winter 2003

AIR FORCE JOURNAL of LOGISTICS

Volume XXVII, Number 4 | Winter 2003 | AFRP 25-1

SPECIAL FEATURES—Contracting and Acquisition

3 **Acquisition Secrets from the National Reconnaissance Office**
Major Joe Mazur, Jr, USAF

14 **Injecting Commercial and Innovative Practices into Operational Contracting**
Major Randall F. Looke, USAF

22 **Time-Based Acquisition Programs**
Major Kevin J. Schields, USAF

FEATURED READING—Logistics Analysis

32 **Flyaway Costs Versus Individual Components of Aircraft: An Analysis**
Captain Dan Ritschel, USAF
Major Michael A. Greiner, USAF
Daniel E. Reynolds
Michael J. Seibel

DEPARTMENTS

40 **Current Logistics Research**
AFMC/XPS Logistics Analysis
Richard A. Moore

44 **Inside Logistics**
eLog21—Purchasing and Supply Chain Management
Wing Commander Mark Leatham, RAAF

BACK COVER **AFJL Awards**
Most Significant Article to Appear in the *Air Force Journal of Logistics,* Volume XXVII, Number 3

SPECIAL

30 **Excellence in Writing Contest**

General John P. Jumper
Air Force Chief of Staff

Lieutenant General Donald J. Wetekam
Deputy Chief of Staff, Installations and Logistics

Colonel Michael A. Morabito
Commander
Air Force Logistics Management Agency

Editor-in-Chief
James C. Rainey
Air Force Logistics Management Agency

Editor
Beth F. Scott
Air Force Logistics Management Agency

Contributing Editors
Captain Ann M.C. Gayer
Air Force Logistics Management Agency

The *Air Force Journal of Logistics* (*AFJL*), published quarterly, is the professional logistics publication of the United States Air Force. It provides an open forum for presenting research, innovative thinking, and ideas and issues of concern to the entire Air Force logistics community. It is a nondirective publication. The views and opinions expressed in the *Journal* are those of the author and do not necessarily represent the established policy of the Department of Defense, Department of the Air Force, the Air Force Logistics Management Agency, or the organization where the author works.

The *Journal* is a refereed journal. Manuscripts are subject to expert and peer review, internally and externally, to ensure technical competence, accuracy, reflection of existing policy, and proper regard for security.

The publication of the *Journal*, as determined by the Secretary of the Air Force, is necessary in the transaction of the public business as required by the law of the department. The Secretary of the Air Force approved the use of funds to print the Journal, 17 July 1986, in accordance with applicable directives.

US Government organizations should contact the *AFJL* editorial staff for ordering information: DSN 493-0885/0889/0890 or Commercial (334) 953-0885/0889/0890. *Journal* subscriptions are available through the Superintendent of Documents, US Government Printing Office, Washington DC 20402. Annual rates are $15.00 domestic and $18.75 outside the United States. Electronic versions of the *Journal* are available via the World Wide Web at: http://www.aflma.hq.af.mil/lgj/Afjlhome.html. The *Journal* editorial staff maintains a limited supply of back issues.

Unsolicited manuscripts are welcome from any source (civilian or military). They should be from 1,500 to 5,500 words. The preferred method of submission is via electronic mail (e-mail) to: editor-AFJL@maxwell.af.mil**. Manuscripts can also be submitted in hard copy. During 2004, they should be addressed to the *Air Force Journal of Logistics*, 50 Chennault Circle, Maxwell AFB, AL 36112-6417. In 2005, the *Journal* will return to its permanent address, 501 Ward Street, Gunter Annex, Maxwell AFB, AL 36114-3236. If hard copy is sent, a 3.5-inch disk, zip disk, or compact disk containing an electronic version of the manuscript should accompany it. Regardless of the method of submission, the basic manuscript should be in Microsoft Word or WordPerfect format, and all supporting tables, figures, graphs, or graphics must be provided in separate files (preferably created in Microsoft Office® products; if Microsoft Excel is used to create any of the charts or figures, the original Excel file must be supplied). They should not be embedded in the manuscript. All submissions will be edited in accordance with the *AFJL Manual for Style.***

Articles in this edition may be reproduced in whole or in part without permission. If reproduced or reprinted, the courtesy line "Originally published in the *Air Force Journal of Logistics*" should be included.

Special Feature

The military must continue to adapt to evolving missions and working with a broad range of allies or coalition partners.

contracting and acquisition

Acquisition Secrets from the National Reconnaissance Office
Injecting Commercial and Innovative Practices into Operational Contracting
Time-Based Acquisition Programs

From peacekeeping, to feeding starving nations, to conducting counterdrug operations, to homeland defense, the military must continue to adapt to evolving missions and working with a broad range of allies or coalition partners. Acquisition and contracting infrastructures and processes must evolve to support the new spectrum of demands and challenges. New technological advances must be capitalized on and integrated into the infrastructure. Similarly, the acquisition and contracting communities must examine existing processes and look for ways to make quantitative and qualitative improvements.

This section looks at several acquisition and contracting improvement initiatives. In "Acquisition Secrets of the National Reconnaissance Office," Major Mazur examines the changes made and the changes needed in the acquisition of space systems. In the second reading, Major Looke discusses the impediments and barriers to using more commercial and innovative practices at the operational contracting level. Of particular note is Looke's consolidation of several major innovations being implemented by operational contracting units. In the final reading, Major Schields examines time-based acquisition programs—one solution to high program costs, technological obsolescence, requirements evolution, and meeting new and evolving threats.

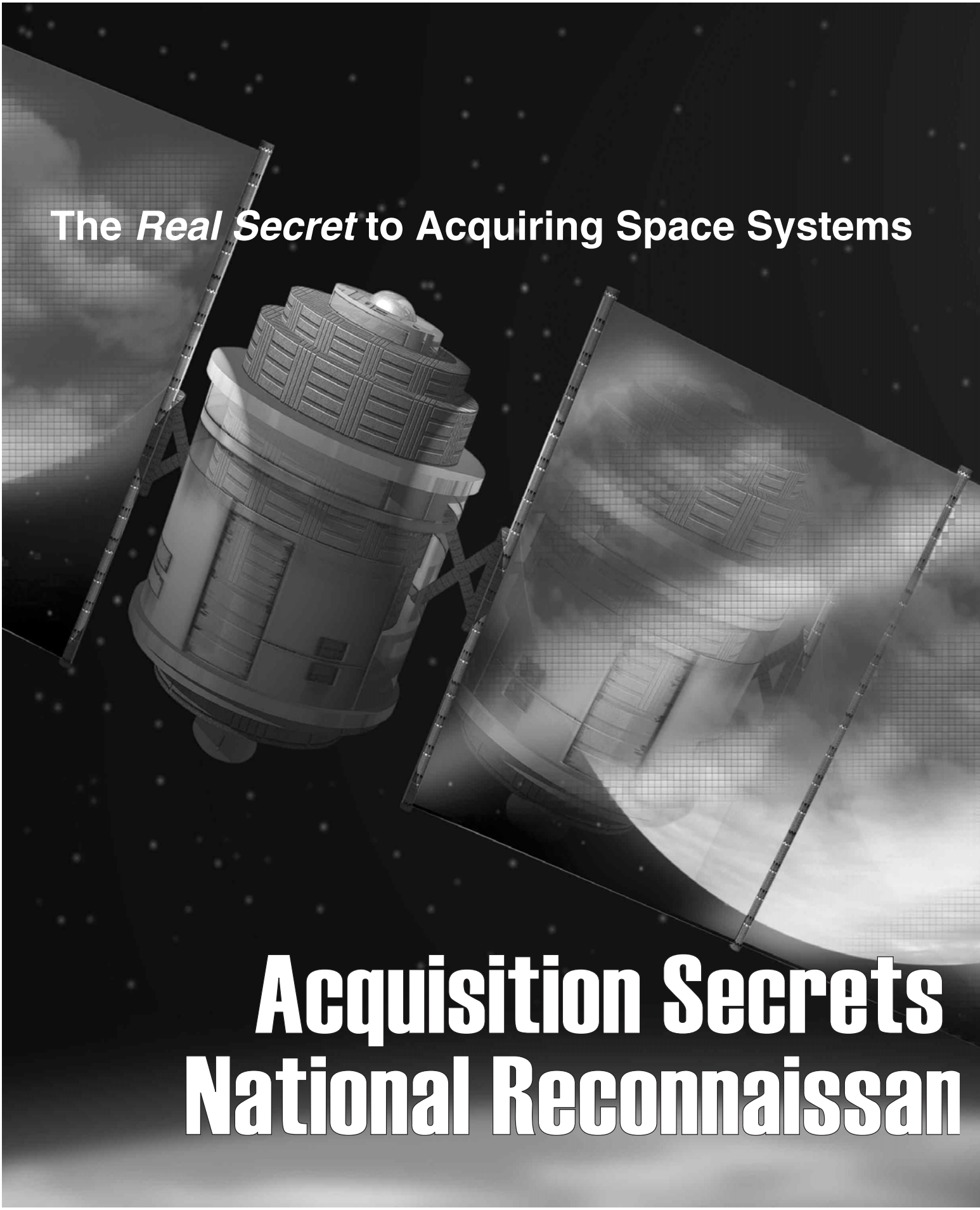
The *Real Secret* to Acquiring Space Systems
Acquisition Secrets
National Reconnaissan

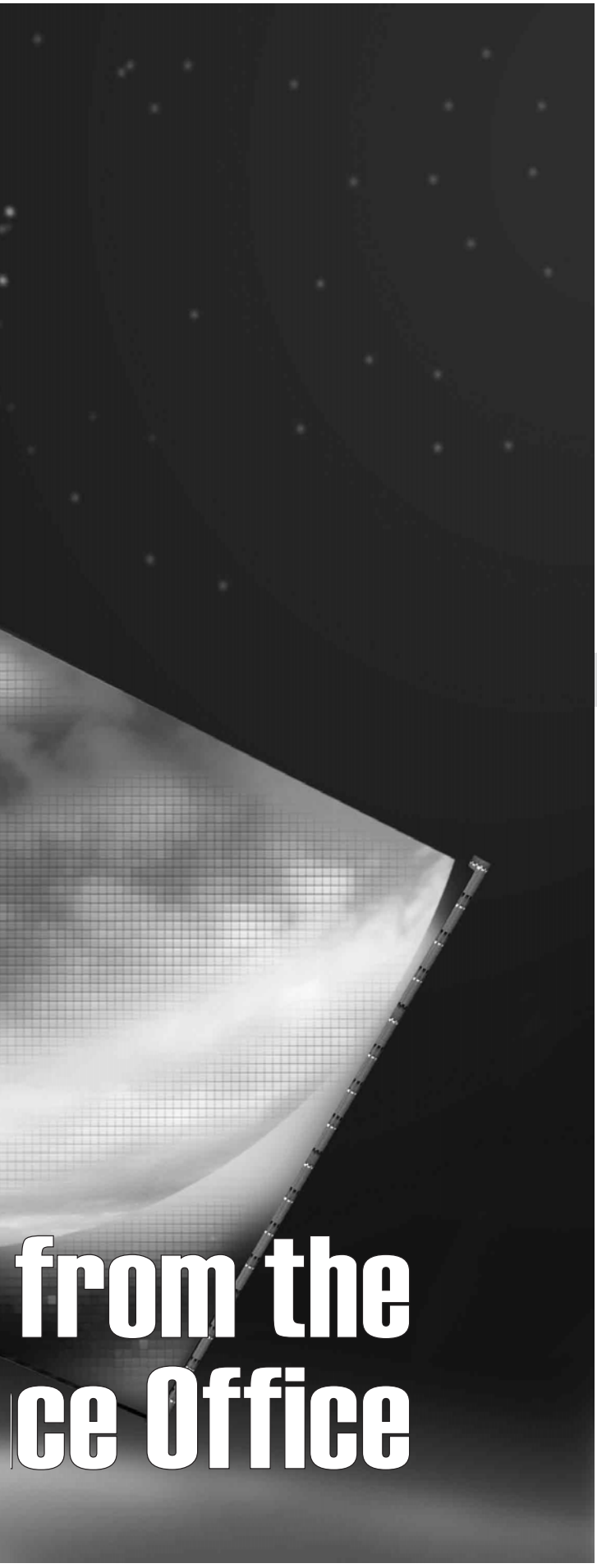

from the
ce Office

Major Joe Mazur, Jr, USAF

Special Feature

We always have to remember that the basic purpose of the acquisition system is to provide for the needs of warfighters; get them what they need, when they need it, at an affordable cost. Our credibility suffers to the extent that we fail to meet this basic responsibility.

—Deidre Lee, Director
Defense Procurement and Acquisition Policy

The National Reconnaissance Office (NRO) is the single national organization tasked to meet the government's intelligence needs for space-borne reconnaissance. It is responsible for unique and innovative technology; large-scale systems engineering, development, acquisition and operation of space reconnaissance systems; and related intelligence activities needed to support national security missions.[1] The NRO has a reputation as being the government's best systems acquisition and operations organization. The argument is made frequently that this is a result of special authorities or waivers to federal acquisition regulations that special access or *black* programs receive. The reality of this argument, as seen by those acquisition professionals with experience working on unclassified and classified programs, is quite different from the perception from those on the outside. Since the end of the Cold War, NRO

programs such as the Future Imagery Architecture (FIA) has become immersed in much of the normal government acquisition process, while several critical *white world* space programs, such as the Evolved Expendable Launch Vehicle (EELV), receive waivers to acquisition policies that have not even been tried or authorized at the NRO.

For space acquisition programs, current Department of Defense (DoD) acquisition directives (the 5000 series) have been rewritten as National Security Space (NSS) Acquisition Policy 0301 to create an acquisition policy environment that fosters efficiency, flexibility, creativity, and innovation.[2] These words historically have been associated with black programs where the pursuit of breakthrough technologies in an environment of security limitations and strict need-to-know rules increased responsibility and decreased oversight. This article examines the common characteristics of space systems acquisition and then focuses on the unique organizational cultures and approaches to satellite acquisition that NRO and the Air Force take. Next, the article looks at some of the key reasons the NRO's lead in satellite acquisition has been eroding and the impact this has had on the NRO's ability to field vital national space assets. Finally, recommendations regarding the future of NRO and Air Force space acquisition practices are discussed, including a proposal to redevelop the capability to acquire breakthrough technologies with formation of a new organization with special acquisition authorities.

Within the intelligence community (IC), the NRO is responsible for classified space reconnaissance systems acquisition and operation. Within the DoD, the Air Force Space Command (AFSPC) is responsible for acquisition of space systems through its Space and Missile Systems Center (SMC) and operation of space systems through its space wings assigned to Fourteenth Air Force. This study will compare information available about one of the largest NRO acquisition programs, the Future Imagery Architecture, and one of SMC's largest acquisition programs, the EELV. While not representative of all space programs at these two agencies, these programs are sufficiently similar regarding acquisition time, value, and importance to the acquiring agency. The FIA is the first satellite acquisition where the NRO has released any significant information to the public.

This study took advantage of and did not duplicate significant research available from the Space and NRO Commission Reports, comparing the cost, schedule, and performance of NRO, the National Aeronautics and Space Administration, and Air Force space systems. The article focuses on the relative acquisition strengths of the two organizations and makes recommendations for their future transformation and roles in space procurement, not on the programmatics of the systems themselves.

Last, although this article includes information from the author's personal experience concerning the acquisition of black programs or "a program that is considered so sensitive that the fact of its existence is a 'core secret,' defined in USAF regulations as 'any item, progress, strategy, or element of information, the compromise of which would result in unrecoverable failure,'"[3] the article itself contains no classified information.

Characteristics of Space System Acquisition

The US will not remain the world's leading space-faring nation by relying on yesterday's technology to meet today's requirements at tomorrow's prices.

—Space Commission Report

For more than 40 years, NRO and the Air Force have been developing and acquiring leading-edge technology and space systems to support US military forces and the National Command Authority. These systems have included the world's first electro-optical spy satellite, Corona, whose images dispelled the *missile gap* of the Cold War, the Global Positioning System (GPS) that created a revolution in targeting capability using precision-guided munitions, and the Atlas and Titan launch systems that placed these capabilities in orbit. The US military is increasingly dependent on space systems for communications, signals and imagery intelligence, early warning, and weather forecasting. These systems are similar to their land-based brethren in that they are suffering from the *procurement holiday* of the late 1990s. The holiday is over. DoD and the intelligence community will need to replace virtually their entire on-orbit inventory over the next decade, at an estimated cost of more than $60B.[4]

These new space systems are being acquired in a rapidly changing acquisition environment that has four principle characteristics:

- Constrained budgets
- Increased congressional oversight
- Flexible requirements process
- Changed acquisition management policies[5]

The environment has caused serious development problems and cost growth to both organizations. The NRO's FIA program "is more than a year behind schedule and $3B over budget."[6] In late 2002, the Air Force's Space-Based Infrared System (SBIRS)-High was at least 24 months behind schedule, and the program office estimate to complete the program was $4B over the value of the initial contract award.[7] As Air Force Secretary James G. Roche told the *Wall Street Journal,* in an interview published 2 December 2002, "Almost all the space programs are in trouble, and that costs [the Defense Department] billions of dollars more than expected."[8] The following is an indepth analysis of each of the four principle characteristics that drive the acquisition of space systems.

Constrained Budgets

During the decade of the 1990s, the budgets for acquisition programs steadily declined. At the same time, an increased operations tempo and aging systems put significant pressure on operations and maintenance accounts. The NRO's motto, proudly displayed in the headquarters entrance, is *One Team—Revolutionizing Global Reconnaissance*. Some might say that the word *revolutionizing* should be replaced with *maintaining* as most of the agencies' transformational systems such as Discoverer II, which would have improved space-based radar technology, were canceled. Agencies also saw their important research and development accounts raided to cover cost growth of the replacement of systems. Recent increases in procurement budgets, as a result of the global war on terrorism, have alleviated

some of the budget pressure, but more must be done. Simple solutions such as generating more realistic budgets at the initiation of a program, emphasizing cost realism for contract award, and maintaining a management reserve for high-risk acquisitions could be implemented.

Increased Congressional Oversight

The NRO has been under increased congressional scrutiny since the revelation in the mid-1990s that it had almost $4B in unspent procurement funds. These funds were appropriated for satellite replenishment, but significant increases in the lifespan of legacy satellites reduced the need for replacement vehicles. Therefore, the funds were not expended. The director and deputy director of the NRO were replaced as a result of this revelation, and Congress required the NRO to implement new information systems that provide greater insight and accountability over funding. The Air Force always has had strong congressional oversight, and it certainly did not decrease. Its SBIRS-High program was subject to a Nunn-McCurdy breach (25 percent increase) acquisition review by the director of the Office of the Secretary of Defense (Procurement). The purpose of this review is to determine if acquisition programs that are significantly over budget or behind schedule should be continued. It is not a rubberstamp review; several DoD programs have been canceled as a result of Nunn-McCurdy breaches.

Another type of congressional pressure is the legislated cost cap. The most significant example of this policy is in the procurement of the F/A-22, an Air Force program that has received considerable press coverage because of its cost growth. F/A-22 procurement is now set for 278 aircraft at a cost of $470.5B, compared to a 1992 estimate of 648 fighters for $75.5B.[9] Within space acquisition, the FIA program has had similar, although largely unpublicized experiences. To be responsive to the request for proposal, competitors were required to submit a proposal that was under the program's budget cap, which many believed was unrealistic. As stated, FIA is now experiencing schedule delays and cost overruns.

Flexible Requirements Process

There is a growing dependence on space systems as an enabler of information operations, missile warning, navigation and synchronization, communications, tracking, and weather forecasting.[10] (See Table 1 for a description of space mission areas, operational functions, and related examples of systems and activities.) The result is that space systems are receiving increased congressional and management oversight in addition to significant funding plus-ups. From a strategic perspective, there is an evolving trend toward building multimission systems capable of filling multiple roles for several customers. An example would be to add an infrared capability to an electro-optical imagery satellite, giving it the ability to spot forest fires and volcanic activity. Another example is to piggyback additional missions on existing platforms, such as putting a science experiment on a relay satellite. In either case, the cost will be less than fielding two separate systems, but much of the savings is offset by the increase in technical complexity associated with developing a multimission system. At the tactical level, the data from satellite platforms are being pushed to the user in the field, allowing near real-time use of information. Each service has a tactical exploitation of a national capabilities program that is responsible for developing new and innovative uses of national systems. This joint use of many space-

Article Highlights

Change must be made to the very culture that formed the base of space systems acquisition.

While the NRO has the reputation of being one of the government's best systems acquisition and operations organizations, it is often argued that this is a result of special authorities or waivers to federal acquisition regulations.The focus of this article is on the relative acquisition strengths of the National Reconnaissance Office and the National Aeronautics and Space Administration. While the article contains no classified information, it does include the author's personal experience with the acquisition of black programs or "a program that is considered so sensitive that the fact of its existence is a 'core secret,' defined in USAF regulations as 'any item, progress, strategy, or element of information, the compromise of which would result in unrecoverable failure.'" Research for the article indicates that the NRO must redevelop its capability to acquire the breakthrough technologies that are going to emerge as the key to the DoD's transformation process.

based assets has led to increased oversight from the Joint Requirements Oversight Council (JROC), an organization that previously had not been significantly involved in space system procurement. Existing satellites are being used in ways that had never been imagined, such as using NRO imagery satellites to track the ash from volcanic eruptions and then alerting commercial pilots to keep them from flying through it. NRO satellites have located hidden threats from space, which enabled warfighters to avoid or neutralize them without risk to friendly forces.

Changed Acquisition Management Policies

In the last few years, there has been significant turmoil in defense systems procurement, in general, and in space systems procurement, in particular. As a result of the Space Commission Report, DoD made the Air Force the primary procurer and operator of space systems by designating it the executive agent for space. For fiscal years 2002 through 2007, the Air Force, including NRO accounts, is expected to spend about 86 percent of the total programmed space funding of about $165B, whereas the Navy, Army, and other DoD agencies are expected to spend about 8 percent, 3 percent, and 3 percent, respectively.[12] The Space Commission Report also resulted in significant changes in Air Force leadership. The position of the Assistant Secretary of the Air Force for Space, who also served as the director of the NRO, was eliminated. The functions were moved to the Under Secretary of the Air Force, who, as the number two civilian in the Air Force and director of the NRO, is responsible for the procurement of all DoD and NRO space systems. The deputy director of the NRO oversees the day-to-day operations of the NRO and IC systems, while a similar new civilian position, the Deputy for Military Space, was created to oversee unclassified and Air Force space systems. Both deputies report directly to the Under Secretary.

Within the Air Force space organization, SMC was moved from the Air Force Materiel Command (AFMC) and placed under AFSPC. In a recent development, the SMC Commander assumed responsibilities of the program executive officer for space. The Air Force Research Laboratory's Space Vehicles Directorate, which does the majority of Air Force space research, remains under AFMC's laboratory structure. This change gives the Air Force the same cradle-to-grave acquisition and operations responsibility that the NRO always had. The Air Force also has integrated NRO's acquisition management process, called Directive 7, and the DoD 5000 series to create a unique acquisition process for space systems, NSS Acquisition Policy 03-01. One of the first steps taken in this regard was to establish the Defense Space Acquisition Board that streamlined the Defense Acquisition Board process to be similar to an NRO acquisition board (NAB). A NAB can be accomplished in weeks instead of months, and the number of people required to coordinate on the process is significantly less than previously required by the 5000 series. A key to the NAB process is use of an independent review team that presents an impartial recommendation to the NRO Director regarding the status of the system and its ability to proceed to the next acquisition milestone.

Within DoD, the most significant departure from earlier norms was the revision of the DoD 5000 series of acquisition policy. In its place, DoD has instituted a policy of evolutionary acquisition, where an evolutionary or phased approach is taken to product development. Evolutionary acquisition approaches include spiral development, cycle-time reduction, cost-of-delay analysis,

Missions	Operational Functions	Examples of Assets/ Programs	Description
Space Control	Space surveillance, protection, prevention, and negation	Space surveillance network	This space control asset is a network that provides space object cataloging and identification, satellite attack warning, timely notification to US forces of satellite flyover, space treaty monitoring, and scientific and technical intelligence gathering.
Force Enhancement	Navigation, satellite communications, environmental monitoring, surveillance and threat warning, command and control, and information operations	Global Positioning System	This network of satellites and supporting ground stations provides all-weather, day/night, three-dimensional positioning information and precise timing data to land-based seaborne, and airborne US and allied forces, as well as other national security, civil, and commercial users. GPS enhances force coordination, command and control, target mapping, target acquisition, flexible routing, and weapon accuracy, especially at night and in adverse weather.
Space Support	Launch operations, satellite operations, modeling, simulation, and analysis/force development evaluation	Air Force Satellite Control Network	This is the primary command, control, and communications support capability for DOD space systems. As a network of systems, it performs a multitude of functions, including data processing, tracking, telemetry, satellite commanding, communications, and scheduling. The network has 15 worldwide fixed antennas, one transportable system, and two mission critical nodes.
Force Applications	Intercontinental ballistic missile sustainment, conventional strike	Minuteman III Sustainment	This program sustains the US strategic ballistic missile system.

Table 1. Space Missions, Operational Functions, and Examples of Related Assets and Programs[11]

and the Warfighter Rapid Acquisition Process (WRAP).[13] Table 2 describes recent acquisition initiatives in more detail. Although these processes are useful to the Air Force, where, for instance, GPS satellites are produced in small quantities, the NRO generally produces satellites as *one of* in a craft-manufacturing, versus production-line, process.

Supporting Data and Findings

The former distinctions between black programs, white space, military, civil, and commercial space are growing increasingly blurred and becoming virtually seamless.

—Dr James G. Roche, Secretary of the Air Force

NRO Acquisition Strengths

Since its inception, the NRO has had a reputation as the preeminent research, development, and acquisition organization in the intelligence community and DoD. Within the contractor community, it is considered "the most effective element of the US Government"[14] The NRO gained this reputation by developing cutting-edge technology, solving complex systems engineering problems, fielding state-of-the-art reconnaissance systems, and delivering time-critical intelligence, all within a highly classified, need-to-know environment. There are many reasons why the NRO enjoyed such success in its past, and the following attributes are considered essential for it to maintain its present status within the acquisition community.

End-to-End Acquisition. The NRO has been unique among DoD acquisition organizations in that, in addition to acquiring intelligence systems, it also operates and maintains them. This end-to-end approach to acquisition has several significant advantages. First, the *customer* is involved in the purchase decision. The space systems operators are on the acquisition team, writing the concept of operations and the systems requirements documents. They see how the systems are operated and bring their experience back to the development of new systems, establishing a highly effective feedback loop. Second, the systems are acquired as a whole, not as separate elements; that is, the NRO is responsible for acquisition of the satellite vehicle, the launch vehicle, the command and control element, the processing system, the launch services, operations and maintenance, ground stations, security, and a host of other products and services. While the NRO is not responsible for all aspects of the intelligence cycle—such as the tasking, exploitation, and dissemination functions (Figure 1)—the collection and processing function for which it is responsible represents the largest investment in system development.

Third, NRO development contractors operate with an organizational structure that mirrors the government's. The contractor who develops a satellite system usually will fly the satellite on-orbit. This, in itself, is a significant difference from Air Force space programs where the satellite operation is handed over to the military space operators. The program manager of an NRO system is responsible for ensuring that specifications, interfaces, and a host of other engineering and programming issues are optimized to deliver a satellite that operates correctly on-orbit. The Government and the contractor consider anything less than perfect on-orbit performance to be a failure.

Special Authorities. Acquisition authority for the NRO comes from the Director, Central Intelligence (DCI) and is delegated to the Director, NRO, who subsequently delegates the authority to

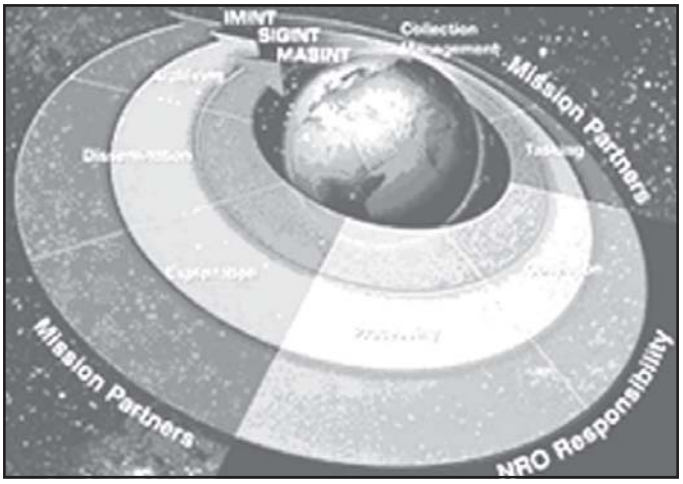

Figure 1. Today's Intelligence Process[14]

the NRO Director of Contracts. This acquisition authority comes from Title 50 of the US Code as opposed to the Title 10 authority of the DoD. The NRO cannot acquire weapon systems, and the DoD cannot acquire space reconnaissance systems. Within the NRO, normal DoD procurement policies, regulations, and procedures are not followed. The NRO uses Federal Acquisition Regulations (FAR) and its own procurement regulation, the *NRO Acquisition Manua*l (NAM). Within the manual, the following special authorities are used:

- The NRO is not required to report to DoD in accordance with the FAR and has waivers to certain aspects of the FAR; for example, the NRO does not consider Small Business Administration (SBA) or small business subcontracting in contract awards. Informally, the NRO keeps track of its compliance with the SBA goals and meets the majority of them.
- The NRO has a waiver from full and open competition requirements. It will compete classified requirements only among those contractors who have the appropriate security clearances to receive solicitation. It has several different means to bring in new contractors to increase the pool of available contractors, but it is not required to do so. The NRO does not advertise its requirements in the *Commerce Business Daily* or any other unclassified source. With the exception of the Future Imagery Architecture, the NRO has not announced significant contract awards to either the public or Congress. In the case of the Future Imagery Architecture, only the successful offeror was announced; other information such as contract value and period of performance remained classified.
- The director of the NRO is the final acquisition approval authority for all NRO acquisitions. Authority is delegated down within the NRO, but the director does not have to go outside the NRO for any further approvals. The NRO has spent considerable time and effort involving mission partners, users, and external staffs, although it was not required to do so.
- The NRO has the ability to write both classified and unclassified contracts. There are pros and cons to using each type of contract, and procurement officials have an extensive classified contracting guide to help them decide which contract is appropriate for their situation.
- Industry can and does protest NRO contract awards. If the protests were to go above the agency level, the Government Accounting Office (GAO) could set up a special classified

court to hear the proceedings. The NRO uses alternative dispute resolution (ADR) techniques to solve protests at the agency level, if possible.

- For leasing, the NRO does not have to go through the Government Services Agency (GSA).
- For facilities, the NRO does not have to go through a DoD construction organization such as the Army Corps of Engineers.[17]

Experienced Personnel

Within the lobby of NRO Headquarters, a large banner was strung across the entrance with the statement *People—Our Most Valued Asset*. In other agencies, this might be just a slogan, but at the NRO, it is a fact. The NRO is a selectively manned organization, where people hired to work already have proven they are outstanding performers within their respective agency and career field. NRO personnel are senior members of the uniformed and civilian DoD services, specifically the Air Force and Navy, and senior members of the Central Intelligence Agency (CIA). Because of their experience and qualifications, NRO employees work with little supervision and a high degree of empowerment. Major systems are acquired by system program offices (SPO) using integrated product teams whose members can make

Organizational Description	
Air Force as Executive Agent for Space.	In response to the Space Commission's recommendation, the Secretary of Defense issued a memorandum directing that the Air Force be designated the executive agent for space within DoD, with department-wide responsibility for planning, programming, and acquiring space systems.
Milestone Decision Authority.	The Under Secretary of Defense for Acquisition, Technology, and Logistics gave the Secretary of the Air Force milestone decision authority for acquiring DoD space systems. The Secretary redelegated this authority to the Under Secretary of the Air Force/Director, NRO.
National Security Space Integration (NSSI).	This office was established to guide and coordinate implementation of the Space Commission's recommendations. It is charged with providing program plans, policy integration, and acquisition support among other activities. It also will be responsible for leading, developing, maintaining, and coordinating the national security space plan. NSSI is located within the Air Force, reporting to the Under Secretary of the Air Force/Director, NRO.
National Security Space Architect.	This office is responsible for developing architectures to guide new systems acquisitions and ensure that they can work together effectively. It also will be responsible for ensuring that Air Force and NRO funding for space is consistent with policy, planning guidance, and architectural decisions and preparing an annual National Security Space Program assessment.
Funding	
Space is designated a *virtual* major force program.	The Space Commission recommended that a *major force program* be established to improve management and oversight of space programs. A major force program is a DoD budgeting mechanism that aggregates related budget items into a single program to track program resources independent of the appropriation process and contains the resources needed to achieve an objective or plan. Instead of creating a separate major force program for space, DoD established a *virtual* major force program to increase visibility of resources allocated for space activities. The virtual major force program identifies spending on space activities within the other major force programs and provides information by functional area.
Acquisition Management and Oversight	
Best practices incorporated into DoD acquisition policy.	DoD acquisition policy (DoD 5000 series for acquisition) to embrace acquisition practices that characterize successful programs for acquiring and developing systems. These focused primarily on making sure technologies are demonstrated to a high level of maturity before beginning product development and taking an evolutionary or phased approach for producing a system. The changes represent substantially different ways of doing business for DoD in that they essentially would separate technology development from a weapon system or space system development program and deliver capabilities in phases versus one *big bang*. This was done to curb incentives to overpromise the capabilities of a new system and rely on immature technologies and make sure that technologies and funds are available to make good on promises.
Defense Space Acquisition Board.	To reduce oversight time for space programs, DoD set up the Special Defense Space Acquisition, Review Board modeled after one employed by the NRO, which will have one layer of review at each major milestone throughout the acquisition process. Under this new oversight process, the team would spend about 8 weeks onsite working full time with program officials and conclude this work with recommendations to the board on whether or not to allow the program to proceed. DoD anticipates that the new process will decrease milestone decision cycle time from about 8 to 12 months to about 8 to 12 weeks.
Other practices being considered for improving space program acquisition.	The DoD also is looking to apply other practices considered by the Air Force and Army as best practices for inclusion on space program acquisition. For example, the NRO will be evaluating the possibility of using a best commercial practice for project selection approval and funding, referred to as WRAP, that is to facilitate rapid deployment of new technology and capabilities. The WRAP currently is evolving from a new program start process to a new technology insertion program. Another practice under study is strategic supplier alliances that would establish long-term comprehensive supplier partnerships to leverage the purchases of material, products, and services in a more effective and efficient manner.

Table 2. Recent Acquisition Initiatives[16]

decisions generally not associated with their level in government. In general, military team members are O-4s and above, and civilians are GS-13 and above. Program managers are O-5 and above or GS-15 and above. SPO directors are O-6 and above or civilian members of the Senior Intelligence Service. The lines of authority at the NRO are very short, and senior officials are accessible when their decisions are required. The normal tour at the NRO for military and civilians is 3-5 years, with many returning on a rotational basis.

NRO Acquisition Weakness—FIA Requirements Process

Dr Marvin Sambur, Assistant Secretary of the Air Force for Acquisition, in reference to Air Force acquisition cycle times, said, "On average, Air Force programs' cycle times run about 10 years, and that's only the average; some programs take up to 25 years to get to the field."[18] Acquisition cycle times at the NRO run about 7 years, on average. The FIA program, despite a sophisticated 18-month requirements process, is well on track to exceed this average. The system currently is at least 2 years behind schedule and $3B over budget. In its haste to be all inclusive to the DoD and IC community, NRO experienced a common problem that any program manager can relate to—too many customers bringing too many requirements with too few financial resources to back them up. The successful FIA contractor cannot build the required system within the government's cost cap, resulting in both a reduction in requirements and a cost growth on the program. In addition, at least one mission partner that participated in the requirements process—the National Imagery and Mapping Agency (now the National Geospatial Intelligence Agency)—did not budget sufficient resources for its exploitation, dissemination, and archiving function, leaving the NRO and DoD to find additional resources to complete the system. Finally, the FIA requirements were put through reviews, such as the JROC, that are not required of intelligence systems. There may be some benefit in coordinating requirements with your largest user, the DoD, especially in the joint environment that characterizes acquisition today, but a more effective process would have been to provide the JROC with status, not approval briefings. The NRO has had unparalleled success in delivering intelligence systems despite incredible setbacks. The first imagery program, Corona, had 13 successive failures prior to its first success. Unfortunately, with the FIA program, the NRO and our nation cannot afford failure. The total acquisition value of the FIA program is classified, but it is the largest contract that the NRO has awarded to date.

Air Force Acquisition Strengths

The Secretary of Defense has the authority to extend many of the special authorities used by the NRO to the DoD acquisition community. In fact, Rumsfeld, in a 2 January 2003 memo, gave the Missile Defense Agency special authority to acquire a ballistic missile defense system with streamlined acquisition procedures and a new, more flexible oversight process.[19] Within the Air Force, the Secretary of the Air Force has established pilot programs to implement innovative acquisition processes.[20] One such program, EELV—which will replace the existing Delta, Atlas, and Titan launch vehicles—was the subject of the research for this article. While not immune to bureaucracy, the EELV program was unique in that it was granted special authorities and increased flexibility through the use of acquisition reform initiatives, as outlined below.

Special Authorities. For the initial development of the EELV program, the Air Force elected not to use a traditional FAR-based contract, which specifies literally hundreds of mandatory requirements, such as subcontracting reports, patent rights certifications, open access for audits, and the related government oversight. Instead, the Air Force used Section 845 of the National Defense Authorization Act (PL 103-160) Other Transaction (OT) authority. Section 845 OT authorities are used principally by the Defense Advanced Research Projects Agency to acquire prototype systems and were used in the initial development of many of the unmanned air vehicles used so successfully in Operations Enduring Freedom and Iraqi Freedom. Other transactions are used when the Government is trying to encourage innovation by defense contractors and, in the case of EELV, could be used because the contractors were funding at least one-third of the total cost of the project ($500M of $1.5B).[20] The disadvantage of other transactions is that, although they are fixed-price, technically, there is no contract, and the contractors actually are not required to deliver any specific product beyond their best efforts. The Government is technically a silent partner with almost no control over contractor spending and decisionmaking.[22] Because of these drawbacks, subsequent EELV purchases, beyond the first lot, were made under FAR Part 12, *Commercial Acquisition*, rules.

Increased Flexibility Through Acquisition Reformation Initiatives. The EELV program was developed using the latest acquisition reform initiatives available when its acquisition strategy was approved in June 1998. The initiatives included:

- A streamlined chain of command with a single program manager with the responsibility, authority, and accountability to execute the program;
- Single acquisition management plan to streamline routine acquisition documentation;
- SPO limited to 106 experienced personnel;
- SPO personnel supplemented by Aerospace Corporation (a federally funded research development center) and Defense Contract Management Agency personnel;
- Minimal contract data requirements list items;
- Limited key performance parameters;
- Use of government and contractor integrated product teams;
- Use of commercial off-the-shelf components; and
- No military specifications.[24]

The use of these acquisition initiatives and special authorities significantly enhanced the ability of the EELV program office to deliver its product on time, if not on budget. In early 2003, each contractor was able to launch its first EELV successfully, a little more than 5 years after award of the other transactions and well within the traditional 7-year space system development time line.

Air Force Acquisition Weaknesses

The Air Force certainly has had its share of flawed acquisition planning and workforce issues, which have developed into acquisition cost growth and schedule slips on several very visible programs, such as the F/A-22. Within Air Force space systems procurement, flawed acquisition planning has affected many programs from their inception. Acquisition workforce

issues, although not a problem when the program started, are now beginning to affect SMC's ability to implement the EELV program.

Flawed Acquisition Planning. Within months of awarding two $500M fixed-price other transactions to Boeing and Lockheed-Martin, the Air Force discovered that Congress, in the fiscal year 1999 Defense Appropriations Act, reduced the development program funding by $20M. Technically, this reduction, if it had not been corrected in a later budget, would have put the Air Force in default of the OT agreement.[24] Now, because of bad assumptions regarding the future strength of the commercial launch market, the Air Force will have to increase its share of the development funds by $350M if it hopes to keep both contractors in the market.[25] In addition, the Air Force no longer considers the EELV to be a commercial item, and future launch vehicles will be negotiated under the rules of FAR Part 15.

Acquisition Workforce Issues. Two key strengths of the EELV program when it was initiated were "a single program manager with the responsibility, authority, and accountability to execute the program" and "in general, only senior and mid-level captains and civilians are employed on the IPTs, most with prior SPO experience."[26] A recent Booz-Allen study of space system development growth noted "a lack of program manager continuity" and a "gap in relevant experience" as a result of delegating traditional government-owned acquisition management functions to development contractors through total system performance responsibility during the 1990s.[27] In addition, the study noted that there was an increase in the ratio of junior to senior level personnel. Without significant changes, the workforce manning issues are going to increase, putting into question the ability of SMC to find the experienced workforce to implement another program like today's EELV.

Significant Findings

There are three significant findings as a result of the research accomplished for this article. First, NRO and the Air Force have distinct organizational cultures and approaches to the acquisition of a similar commodity—space systems. These cultures are an artifact of the unique history of each organization, its successes and failures, management, personnel, facilities, and view within the DoD. Second, the NRO—with its connection to the CIA and Director, Central Intelligence—developed significant acquisition strengths that enabled it to acquire complex satellite systems successfully. The strengths include its end-to-end approach to systems development, special acquisition authorities, and a cadre of experienced personnel. Over time and with its most recent large program acquisition, Future Imagery Architecture, the NRO has allowed the key enablers to its success, its culture and acquisition strengths, to erode to the point that the organization is better equipped to maintain its legacy systems than it is to acquire the cutting-edge technology that will be required in the future. This erosion of capability comes at the same time the Air Force, with unclassified programs such as EELV, is able to implement many of the same, if not more, acquisition authorities and processes previously limited to the NRO.

Conclusion

As we prepare for the future, we must think differently and develop the kinds of forces and capabilities that can adapt quickly to new challenges and to unexpected circumstances. We must transform not only the capabilities at our disposal, but also the way we think, the way we train, the way we exercise, and the way we fight. We must transform not only our armed forces, but also the department that serves them by encouraging a culture of creativity and prudent risk-taking. We must promote an entrepreneurial approach to developing military capabilities, one that encourages people to be proactive, not reactive, and anticipates threats before they emerge.

—Donald H. Rumsfeld, Secretary of Defense

The global war on terror, the current Presidential administration, Secretary of Defense, and Secretary and Chief of Staff of the Air Force present the perfect storm of opportunities to change or transform the acquisition of US space systems. Never before have so many senior officials in the acquisition management chain agreed that changes must be made, not just to the regulations and approaches but to the very culture that formed the base of space systems acquisition. Two recent congressional commissions, the Space Commission and NRO Commission, add their significant weight to the revitalization of space acquisition.

The recommendations of this study are twofold. First, NRO and the Air Force, through SMC, should continue to work at merging their best acquisition practices. The principle outcome of this merger would be a change in Air Force acquisition culture toward more streamlined and efficient acquisition through the use of the NRO's Directive 7 and NAB processes. This work has been completed significantly with the release of NSS Acquisition Policy 03-01. Second and more important, the NRO must look back to its acquisition heritage and redevelop its capability to acquire, rapidly and efficiently, the breakthrough technologies that are going to emerge as the key to the DoD's transformation process.

One approach, as recommended by the Space Commission, is to develop, within the NRO, what the commission termed an office of space reconnaissance, based on Lockheed's famous *Skunk Works* model, to handle the toughest and most complicated acquisitions. The NRO would continue to handle the operations and maintenance of existing legacy programs and develop the less cutting-edge systems.

The revolutionary organization would be staffed by experienced government and civilian workers from the military services and CIA. This program staff generally would be on, at least, their second or third tour in space acquisition. They would receive wide latitude from management, including unique special authorities; the ability to pursue a streamlined acquisition process; and other tools, especially full funding, to ensure their success. While organizationally a part of the NRO, administratively the revolutionary organization would operate as a separate entity with its own budget and separate security controls. The implementation of a revolutionary organization is the key to regaining the lost culture of the NRO pioneers, the individuals and groups that established space reconnaissance with the launch of the Corona program. It is our legacy to prove historian William H. Gregory wrong when he stated, "Military

buying has become fixed in the public mind as spending billions and, often as not, producing a turkey, not an eagle."[28]

Notes

1. *Report of the Commission to Assess United States National Security Space Management and Organization*, Pursuant to Public Law 106-65, 11 Jan 01, 23.
2. Paul Wolfowitz, Defense Acquisition, Deputy Secretary of Defense memorandum, Washington DC, 2002.
3. Bill Sweetman, "In Search of the Pentagon's Billion Dollar Hidden Budgets," 5 Jan 00 [Online] Available: http://www.abovetopsecret.com/pages/hiddenbudget.html, 5 Feb 03.
4. *Report of the Commission to Assess US National Security Space Management and Organization*, 12.
5. *Space Systems Development Growth Analysis*, Booz/Allen Hamilton, Los Angeles, California, 2 Aug 02, 3-5.
6. "Trouble Brewing in Future Imagery Architecture," *Air Force Magazine*, Feb 03, 26.
7. *Space Systems Development Growth Analysis,* 23.
8. Quoted in "Trouble Brewing in Future Imagery Architecture," *Air Force Magazine*, Feb 03, 26, in *Wall Street Journal*, 2 Dec 03.
9. Robert Wall, "Watch List," *Aviation Week and Space Technology,* 16 Jan 04, 33.
10. GAO, Military Space Operations, GAO-02-738, Washington, DC, Sep 02, 1.
11. Military Space Operations, 3.
12. *Ibid.*
13. Maj Ross McNutt, "Evolutionary Acquisition and Spiral Development," lecture, Air Command and Staff College, Maxwell AFB, Alabama, 4 Mar 03.
14. *Report of the National Commission for the Review of the National Reconnaissance Office*, Pursuant to Public Law 106-120, 3 Dec 00, 32.15.
15. NRO Commission Report, 22.
16. Military Space Operations, 7-10.
17. Bill Savage, Defense—Intelligence Space Integration, prepared for the Commission to Assess US National Security Space Management and Organization [Online] Available: http://www.globalsecurity.org/space/library/report/2001/nssmo/article01.html, 12 Apr 03.
18. Chuck Paone, "Acquisition Chief Discusses Transformation," *Program Manager,* Vol XXXII, No 1, DAU 172, Jan/Feb 03, 67.
19. Statement of the Honorable E. C. "Pete" Aldridge, Under Secretary of Defense for Acquisition, Technology, and Logistics, report before the Strategic Subcommittee of the Senate Armed Services Committee, 13 Mar 02, 2.
20. Statement of Darleen A. Druyun, Principal Deputy Assistant Secretary of the Air Force for Acquisition and Management, *Presentation to the Committee on Armed Services, Subcommittee on Readiness,* US Senate, 17 Mar 99, 13.
21. *Manager*'s *Guide to Technology Transition in an Evolutionary Acquisition Environment*, Version 1.0, Defense Procurement and Acquisition Policy, Office of the Under Secretary of Defense for Acquisition, Technology, and Logistics, 31 Jan 03, 2-12.
22. John Kelly, Chris Kridler, and Kelly Young, "$1 Billion Question: Where Has All the Air Force EELV Money Gone?" *Florida Today*, 25 Aug 02 [Online] Available: http://www.space.com/missionlaunches/fl_eelv_020825a.html, 17 Mar 03.
23. Lt Col Sidney Kimhan III, Capt Janet Grondin, Capt Jennifer Kares Klein, and John Martillo, "EELV Program—An Acquisition Reform Success Story," *Program Manage*r, May-Jun 99, 87-88.
24. Druyun, 13.
25. Frank Sietzen, Jr, Spacelift Washington: USAF planning for additional EELV funding," 16 Mar 03 [Online] Available: SpaceRef.com at http:/www.spaceref.com/news/viewnews.html?id=426, 17 Mar 03.
26. Kimhan, et al, 89.
27. *Space Systems Development Growth Analysis,* 33.
28. AFMC/PK Military Manning Review.
29. William H. Gregory, quoted in Wilbur D. Jones, Jr, *Arming the Eagle—A History of US Weapons Acquisition Since 1775*, Defense Systems Management College Press, Fort Belvoir, Virginia, 1999, 373.

Major Mazur is the Program Element Monitor, Directorate of Space Acquisition, Office of the Secretary of the Air Force. At the time of the writing of this article, he was a student at the Air Command and Staff College.

notable quotes

Every logistics dollar expended on outdated systems, inefficient or excess capability, and unneeded inventory is a dollar not available to build, modernize, or maintain warfighting capability.

Paul G. Kaminski, Under Secretary of Defense for Acquisition and Technology

It has been heartening to see so many nations agree democracy is the best system of government. But there are important steps between consensus and reality. Democracy is learned behavior.

William J. Perry, Secretary of Defense

Major Randall F. Looke, USAF

Special Feature

Defense acquisitions should emphasize performance-based requirements, include provisions that enable commercial practices, and encourage the participation of nontraditional commercial entities .... The use of (Federal Acquisition Regulation) Part 12 is designed to provide the Department of Defense (DoD) with greater access to commercial markets with increased competition, better prices, and new market entrants and/or technologies.

—J. S. Gansler, USD (A&T)[1]

Acquisition reform has been around for decades in one form or another. *Aviation Week* published an article in the 1950s on the need to reduce the product development time for aircraft. Of course, the Acquisition Acts of the 1990s really brought reform to the forefront. The Federal Acquisition Streamlining Act (FASA) of 1994 focused on simplifying and reforming some of the overly burdensome procurement laws then on the books. The 1996 Federal Acquisition Reform Act (FARA) continued the intent of FASA and created opportunities for agencies to implement more efficient procedures, promote competition, and purchase commercial items with roughly the same ease as nongovernmental agencies. On this last note, the emphasis to acquire more commercial items and services has continued to grow since then. The Federal Acquisition Regulation (FAR) Part 12, *Acquisition of Commercial Items*, has the following as its stated policy on acquiring commercial items:

Agencies shall—(a) Conduct market research to determine whether commercial items or nondevelopmental items are available that could meet the agency's requirements;

(b) Acquire commercial items or nondevelopmental items when they are available to meet the needs of the agency; and

(c) Require prime contractors and subcontractors at all tiers to incorporate, to the maximum extent practicable, commercial items or nondevelopmental items as components of items supplied to the agency.

The preference for continued improvement and greater reliance on commercial items and services is obvious to all in the government's acquisition business, but the ability to require organizations to meet the challenges associated with these efforts is sometimes difficult. This is especially true at the base or operational level of contracting. Air Force contracting squadrons and base contracting divisions are in a unique position to test new innovations and purchase more commercial items and services because of their generally higher numbers of actions and shorter overall acquisition life cycles. However, these organizations seem to have barriers and challenges that slow their trek as they improve.

Injecting Commercial and Innovative Practices into Operational Contracting

This article discusses how government agencies are attempting to interject more commercial and innovative practices into their buying methodology. More specifically, though, this article attempts to identify why it might be more difficult to push these practices down to the operational contracting units and some potential tools to help remove the barriers and overcome the challenges hindering these efforts. Last, this article consolidates a few innovations that are being implemented by operational contracting units in the hope they may be shared with other operational contracting professionals.

Before jumping into thoughts on increasing commercial actions and innovative practices at the operational level of contracting in the Air Force, it is important to understand some background information. In particular, what are the other services and government agencies doing to promote more commercial item and service acquisition, and how does FAR Part 12 facilitate the acquisition of commercial items and services?

Various Efforts, FASA, FARA, FAR Part 12, and the *Commercial Item Handbook*

Every week, it seems, a senior official in this department tells me we are constrained in our ability to do something by an obsolete legal provision. Similarly, I often hear of initiatives we would like to take, but for which we need additional statutory authority. As you develop proposals for the fiscal year 2004 DoD Legislative program, you should adopt the perspective that now is the time to change the way we operate. If you need specific legal authority to accomplish an important goal, or if you need relief from an unnecessary legal restriction, please ask for it …. To assist you, I am enclosing the most current version of the top ten priorities … (Number) 9. Streamline DoD Processes—Shorten … acquisition cycle time—Shorten all DoD processes by 50 percent.

—Donald Rumsfeld, Secretary of Defense[2]

Interjecting commercial and innovative practices into DoD activities is not unique to the Air Force. As the quote from Rumsfeld attests, shortening the acquisition time and DoD processes, in general, must be a priority. This affects operational contracting organizations, as well as other services. Other services are affected by the demands of progress and the need to improve processes. FASA was a major attempt to simplify and reform burdensome procurement laws. FARA carried on that intent by making procedures in federal acquisition more efficient. Promoting and increasing the available use of FAR Part 12 was yet another attempt to make DoD buying agencies realize that restrictive and risk-averse buying is not only not the preferred way of doing business but also not the smart way of doing business. The *Commercial Item Handbook* is a tool to use in getting there.

The Army and Navy have undertaken efforts to improve and reform their acquisition practices. Each entity has a Web site dedicated to improving acquisitions and promoting the use of FAR Part 12. The Army has instituted numerous goals to increase the use of commercial purchases. For instance, the Army wants at least 90 percent of all purchases less than $2,500 to be made with credit cards. This has a direct effect on operational contracting since many base-level purchases fit within this dollar threshold. As of this date, the Army has exceeded that goal. With credit cards as a payment or purchase instrument, the lengthy and restrictive clauses common with many government contracts are not used.[3]

The Navy has the DON (Department of Navy) Acquisition Reform Office Web site that lists upcoming events, reform tools, and quick links to numerous helpful pages. One link will take the reader to a *success stories* page. Although not applicable in all circumstances, the many examples provide tidbits that might be integrated into other acquisitions to include those by operational contracting offices. The Navy believes, to obtain commercial processes and technologies, you must have innovative commercial contracting approaches. As an example, it lists the DON two-phase Commercial Area Announcement (CAA) acquisition approach.[4] CAA is a form of market research where the requirement is posted in numerous journals (for example, *Wall Street Journal* and other major newspapers). The DON agency sponsors a business opportunities day for a reasonable time after the postings and encourages industry attendees to share their innovative approaches that might help meet the current requirement. CAAs benefit both the Navy and industry. Industry has better insight into Navy requirements and also feels more valued in the approaches the Navy uses to fulfill those requirements. The Navy, on the other hand, is exposed to new ideas and innovative methods. Although the separate services are creating and using their own practices, the Government forced all its agencies to look for improvements after the passage of two very important laws.

FASA was instrumental in forcing federal buying offices to start looking at acquisition reform seriously. This act, signed by President William Clinton in October 1994, was an outgrowth of the Section 800 Committee. It was captured in the goals established during the administration's National Performance Review. The Competition in Contracting Act, signed into law in 1984, is the only other act equal in scope to changes in federal procurement laws. FASA was advertised as a simplification and reformation of overly burdensome procurement laws. FASA's major changes affected many areas. For example, in contract formation, the act forced recognition of task and delivery order contracts and provided statutory requirements for post-award debriefings. In the contract administration realm, the act spelled out a preference for performance-based payments. Under the Simplified Acquisition Threshold, the act established a $100K threshold for the use of this procedure and, generally, reserved all purchases between $2.5K and $100K for small businesses. This area greatly influenced actions in the operational contracting realm. In acquisition management, the act established that policy-stating agencies, on average, should meet 90 percent of the cost and scheduled goals on contracts. In the small business area, the act increased the ability to restrict competitions to certain types of small businesses, as well as waived certain regulations (for example, repealed the Walsh-Healy Act that forced certification). Most important, at least to the subject of this article, the act had a major new statutory provision that forced federal agencies to *prefer* the purchase of commercial items.[5]

FARA was the next major acquisition reform legislation to impact procurement in the Government. The act promoted more

efficient procedures and exempted contractors from some requirements. Two areas were addressed specifically in FARA: competition and commercial items. Additionally, there were some miscellaneous areas touched by the act. In the area of competition, the act increased the dollar thresholds that forced justifications for other than full and open competition. In competitive negotiations, the act also allowed buying organizations to limit the number of proposals in the competitive range. In small buying offices, such as some operational contracting organizations, this potentially saved many man-hours that would have been spent evaluating proposals. Another operational contracting activity affected by the changes in the area of competition was the design and build selection procedures. The act also made changes under the umbrella of commercial items. For instance, commercial suppliers were given the opportunity, under certain circumstances, to avoid the certification requirements of the Truth in Negotiations Act. Extremely important to operational contracting organizations, the act made simplified acquisition procedures available for use in the procurement of commercial items valued at $5M or less. On a final note, although not encompassing all the changes made by the enactment of FARA, the act increased emphasis on career enhancement for personnel involved in federal procurement. Specifically, it forced procurement agencies to establish ways for personnel to obtain training, education, and career development. It also told agencies to fund separately for the acquisition workforce to receive education and training, to include tuition reimbursement programs.[6] As stated above, one very important aspect of FARA was its preference for commercial items; it truly promoted the use of FAR Part 12.

The Federal Acquisition Regulation has had a definite impact on operational contracting and interjecting commercial and innovative practices. FAR Part 12, *Acquisition of Commercial Items,* specifically states the preference of the Government for the acquisition of commercial items. It establishes that acquisition policies must resemble more closely those of the commercial marketplace. It encourages acquisition of commercial items and components. This regulation—probably more than any other rule, guidance, or law—has impacted and will continue to impact the operational contracting community. Table 1, although dealing mostly with shortening cycle times by shortening development times, is still applicable to the operational contracting realm.[7] Most items purchased by operational contracting organizations have been developed already. However, there are numerous processes the commercial industry has improved upon. Inevitably, some of these processes could be improved in the federal acquisition world—even at the base level.

The *Commercial Item Handbook*—published by the Office of the Secretary of Defense for Acquisition, Technology, and Logistics—is another tool to help interject commercial practices into Air Force operational contracting. The handbook supports the intent of FAR Part 12. More important, it provides clarification on defining commercial item acquisitions and provides guidance on making business strategies for acquiring commercial items.

The purpose of the handbook:

> ...is to help acquisition personnel develop sound business strategies for procuring commercial items. (It) focuses on how market research and cross-competency teaming can increase the government's cost-effective use of commercial items to meet warfighter needs. (It) offers suggestions on questions to ask, and it points to additional sources of

Article Highlights

Acquisition reform has been around for decades in one form or another.

This article discusses how government agencies are attempting to interject more commercial and innovative practices into their buying methodology. It attempts to identify why it might be more difficult to push these practices down to the operational contracting units and some tools to help remove the barriers and overcome the challenges hindering these efforts. It also consolidates a few innovations that are being implemented by operational contracting units in the hope they may be shared with other operational contracting professionals. The article gives some background on what the other services and government agencies are doing to promote more commercial item and service acquisition and how FAR Part 12 facilitates the acquisition of commercial items and services. Interjecting commercial and innovative practices into Air Force operational contracting will ensure contracting professionals are equipped to embrace change and have the tools to make it happen.

information, sources of training, and available tools. (It) is designed to be a practical reference tool for use in commercial item acquisitions.[8]

Topics covered in the handbook include market research techniques, making commercial item determinations, pricing support resources, contract types, and performance management.

FAR Part 12 and acquisition reforms and changes resulting from both FASA and FARA are tools, albeit laws in some cases, to assist federal acquisition professionals to interject commercial and innovative practices into their procurement processes. These tools are as applicable at the operational contracting level as any other level. It is imperative that operational contracting leaders and personnel gain an understanding of these tools to ensure cost-savings and efficiencies are realized. As stated, though, they are just tools. Tools are nothing without people to use them.

People First

If people are coming to work excited … if they're making mistakes freely and fearlessly … if they're having fun … if they're concentrating on doing things, rather than preparing reports and going to meetings—then somewhere you have leaders.

—Robert Townsend

The above quote is telling. If interjecting commercial and innovative practices into operational contracting is a worthwhile endeavor, leaders must understand the people who have to make it happen. Leaders must not only understand their people but also know how to motivate them. Leaders must foster an environment that not only promotes innovation but also allows people to make mistakes. Leaders of operational contracting organizations, whether commanders or chiefs, must recognize and understand the inherent challenges and devise ways to overcome them.

One challenge these leaders face is that operational contracting employees are generally lower grades than those working in either systems or logistics contracting. This is nothing new and originated back in the times when operational contracting was simple buying, defined as standard, firm fixed-price items almost always available in standard commercial configurations. Requirements were advertised, bids were received, and the contractor with the lowest bid was given a contract. Times have changed. In the never-ending journey to make government acquisition more efficient, *buying* has become more complicated. Best value has replaced lowest price in many cases. With all the decreases in military and government civilians, outsourcing of necessary services has increased dramatically. Contracting for services is much more than simply picking the contractor with the lowest price. Best value takes on a whole new meaning when a harmonious working relationship between the contractors and the government personnel they serve is as important as the services they provide. Unfortunately, the grade structure has not changed.

The lower grade structure has two negative sides. First, and this is especially true on Air Force bases that have both operational and systems and logistics contracting personnel, the grade structures differ significantly. For example, at Tinker AFB, Oklahoma, most government civilians working in the operational contracting organization are GS-7s and GS-11s. The personnel working logistics contracting in the Oklahoma City Air Logistics Center are GS-11s and GS-12s. Arguably, their work is different. However, are the complexity of the work and the knowledge required greater, thus requiring higher grades? Many would say no. Many of those people also have tried to change this but with little success. Leaders of operational contracting personnel must be cognizant of the friction this can cause.

The second negative aspect to lower grade structures has to do with the increased complexity of acquisitions. People are being asked to not only do more with less—which they are probably accustomed to—but also do much more complex tasks. Best-value acquisitions are more complicated and demanding than simple firm, fixed-price acquisitions. The traditional and relatively simple invitation for bids has been replaced with requests for proposals. Offerors are being given opportunities to provide oral presentations. Resulting contracts, especially for services, are incorporating not necessarily new but definitely more numerous and complex incentives to contractors. A generic 10-percent profit added to the fixed price is being replaced by award fees and the potential to have longer running contracts. This complexity, although increasing the *best* in best-value contracts, creates many more chances to make mistakes. In general, people tend to shy away from tasks that easily could end in failure.

Trying new and innovative things and change, in general, are not on the top of most people's lists of things to do. People have a love-hate relationship with change. People cannot live and flourish without change, but at the same time, it scares people. Contracting leaders, especially those in operational contracting, must ensure their organization's environment is conducive to taking risks and trying new ideas. To do that, they must learn

Industry	Old Time	Current	Goal
Automobile	84 months	24 months	<18 months
Commercial aircraft	8-10 years	5 years	2-1/2 years
Commercial spacecraft	8 years	18 months	12 months
Consumer electronics	2 years	6 months	
50-70% reduction in development times are typical.			

Table 1. Commercial Success at Shortening Cycle Times

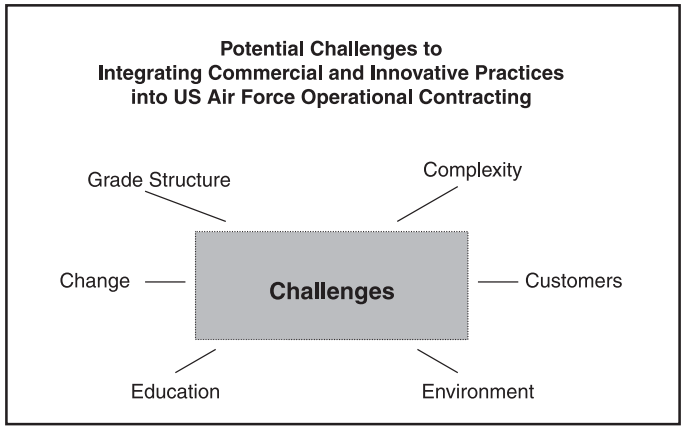

Figure 1. Potential Challenges

how to not only accept failures but also praise people who try but ultimately fail. A quote from a book by Major General Perry M. Smith explains this well. The scenario is that he has been notified of a promotion shortly after weathering some fairly serious failures. He writes:

> I asked the commander of all US Air Forces in Europe how I could possibly have been selected for promotion. The answer I got was fascinating; he replied, "Because you handled failure well." When I told him that I didn't understand what he meant, he told me that each wing commander was failing in one way or another. One had a major drug problem on his base, another had flunked a major NATO [North Atlantic Treaty Organization] inspection, a third commander had a significant racial problem on his base, and yet another had a terrible ground-safety record. He then explained that he learns more of the character of leaders while they are dealing with failure than when they are succeeding. History supports this viewpoint that good leaders turn failures into constructive experiences. As I survey the great leaders of the past, many of them suffered setback after setback before they emerged as extraordinary leaders. Abraham Lincoln, Harry Truman, and Winston Churchill learned from their numerous failures and were strengthened and matured by these experiences.[9]

The point of sharing this excerpt is not to espouse that contracting leaders should have a goal to create another Lincoln or Churchill, but it is important to realize that leaders can be strengthened by failure and improve. All people can learn from their mistakes. Operational contracting leaders must provide an atmosphere that allows risks to be taken, mistakes to be made, and lessons to be learned from those mistakes, without the fear of reprisal. That does not mean people who make mistakes are given rewards automatically. However, there are many methods to *get folks back on their feet,* and they should be praised for trying. One of those methods—and coincidentally another challenge facing operational contracting leaders—comes through educational opportunities.

Just like technology, contracting practices, methods, rules, regulations, and laws are continually changing. Many times, these changes are caused by changes in technology. To continue to interject commercial activities and innovative practices into operational contracting, people must be aware of these activities and practices. Education is the key. The Defense Acquisition University is a prime example of a method for offering continuing education to operational contracting personnel. Numerous courses are available, both in the classroom and online. Courses range from beginning-level contracting courses to specific, to advanced-pricing courses, to courses on military construction contracts. However, courses only benefit people if they are taken. Operational contracting professionals must be aware of these courses, allowed to attend or take them online, and encouraged to share what they have learned with their fellow contracting professionals. Learning through sharing also is promoted via professional organizations.

The National Contract Management Organization (NCMA) is probably the premier professional organization for contracting personnel. NCMA offers nationally recognized certifications. Similar to being recognized as a Certified Public Accountant (CPA), a person can study to earn the title of Certified Professional Contracting Manager (CPCM). Although not as recognized as a CPA certification, earning distinction as a CPCM can provide opportunities not available otherwise. It is recognized by both the Government and business community when hiring or promoting acquisition personnel. The benefits of NCMA do not end with certifications.

As mentioned above, sharing information is valuable to learning about and interjecting commercial activities and innovative practices into operational contracting. NMCA offers numerous conduits to share ideas to do just that. Most local chapters meet regularly via luncheons, training classes, or both. Guest speakers and lecturers talk about new rules and regulations, new and unique practices, and new or ongoing reforms. These forums are extremely valuable to contracting professionals as they are able to not only hear about things they may not know but also ask questions and exchange thoughts about these ideas.

The NCMA vision captures another important aspect for the topic of this article. It reads:

> NCMA's vision is to be the preeminent source of professional development for the practice of contract management. Contract management is a strategic management discipline employed by both buyers and sellers whose objectives are to manage customer and supplier expectations and relationships, control risk and cost, and contribute to organizational profitability and success.[10]

The key words are *both buyers and sellers*. Operational contracting personnel on Air Force bases are the *buyers*. NCMA members, however, consist of both buyers and sellers. The *sellers*, in this case, are members of the commercial industries that provide the items and services to Air Force bases through the local operational contracting organizations. What better way to learn how to interject commercial activities and innovative commercial practices than by interacting with the people who use them? Participating in NCMA and similar professional organizations is a win-win for all participants. Each side can learn about the other side in a nonthreatening, nonbusiness environment. Federal workers can share their thoughts, concerns, and constraints. Contractors can do likewise. In addition to new and innovative ideas, members can share efforts on current and ongoing reforms.

Another challenge for operational contracting leaders and personnel is educating customers, especially base commanders and their staffs. Major command customers are usually cognizant of the acquisition processes procurement professions must follow, but base commanders and their staffs are not always as educated. Further complicating matters are conflicting guidance and loss of control. For instance, a base commander may want to have a certain landscaping project accomplished. With most of these types of activities outsourced to a contractor, the process for getting the project done is not as simple as in the past. An example of conflicting guidance can occur when maintenance work has been outsourced to a contractor. The work is to be accomplished in accordance with normal commercial practices. However, the base commander may have to follow guidance in Air Force instructions that differs from what the maintenance workers are doing. They are meeting the intent of the contract but not the intent of a regulation not specified in the contract. It is a learning process for all involved.

The final challenge discussed in this section is understanding the status of and components within ongoing acquisition reforms that affect operational contracting. This is important for not only leaders of operational contracting organizations but also the people within these organizations. It is hard to reform and

improve if people do not understand why they are undertaking actions and how those actions are affecting their customers on the base.

The Air Force Inspection Agency conducted the Special Management Review of Base-Level (Operational) Acquisition Reform back in 1997. Although 6 years old, the efforts associated with the findings and recommendations continued through 2001. Many of the issues are still around, and it is important for contracting professionals to understand the issues associated with this review. One purpose of the review was to assess how well acquisition reform tenets were being accepted and used at the operational contracting squadrons. The second purpose was to assess the effects on support to base-level customers. Apparently, although numerous acquisition reforms were designed for and implemented within weapon systems contracting, things were much different in the operational contracting environment. None of the Secretary of the Air Force for Acquisition's Lightning Bolts (reform mandates) addressed operational contracting. The request for proposal support offices to be established at major acquisition bases did not materialize at nonacquisition bases. Neither the Air Staff nor the base-level contracting functionals were pushing or seeking acquisition reform for operational contracting units. Unlike weapon systems and logistics contracting, there were no acquisition reform road shows, Web sites, or mandated acquisition reform training.[11]

Things, of course, have improved with acquisition reform at the operational contracting organizations in the Air Force. For instance, the Air Force now has a new instruction on services contracts supporting commercial procurements. The Deputy Assistant Secretary of the Air Force for Contracting has improved the Air Force Contracting home page by including operational contracting issues and best practices. The Air Force and other services have coordinated with the Defense Acquisition University to enhance the basic and intermediate contracting courses by incorporating subjects and modules specifically focused for operational contracting organizations (for example, Standard Procurement System). Another example is the efforts to rewrite the Quality Assurance Evaluation (QAE) program. QAE is a significant program at all Air Force bases. Modifying the program to include new rules associated with commercial service contracts has a huge impact on further steps toward increasing commercial practices at the operational contracting level.[12] Acquisition reforms, like those just mentioned, continue to affect operational contracting personnel. It is imperative to remember, though, that those initiatives do not get promulgated throughout base-level contracting organizations if the people are not aware of them. Operational contracting leaders must foster environments that are conducive to reform and change.

There have been and will continue to be many challenges facing the people in operational contracting organizations. Whether dealing with seemingly unfair grade structures and the increasing complexity of acquisitions at the base level, fighting to promote continual education, or continuing the acceptance and deployment of acquisition reforms, operational contracting leaders must remember to put people first. They are the folks who ultimately must put new commercial and innovative ideas into their operational contracting practices. Knowing what motivates the contracting professionals at the base level and knowing how to motivate them is paramount to success.

Performance-Based Contracting and Government Purchase Card Initiative

The performance-based service contracting (PBSC) approach for service contracting is not a panacea or perfect answer for effective contracting. It is a preferred contracting method that has advantages and shortcomings. PBSC reduces government contract management efforts by focusing on end results rather than the day-to-day work processes—while at the same time allowing contractors more opportunity to manage their businesses without interference.

—Dr Henry Petersohn[13]

This section is devoted simply to discussing two initiatives having relevance to operational contracting and improvement. Both are aimed at interjecting commercial and innovative practices. Both are evolving as this is being written. There are many other initiatives that could be discussed; however, these two are important and should be understood, at least at the basic level, by all operational contracting personnel.

The above quote is the introduction to an article in the April 2003 issue of *Contract Management*. At the heart of the statement are the words "focusing on end results rather than the day-to-day work processes." That is what performance-based services acquisition (PBSA) is all about. A PBSA contract, if written appropriately, tells the contractor what the Government wants done but does not tell the contractor how to do it.

A study by RAND, via Project Air Force, interviewed numerous groups within the Air Force that are using PBSA contracts. They found three key areas related to success. First, you must have teamwork to succeed. Teamwork encourages buy in, and with any new initiative, you must have the support of all players in the game. Second, market research is important to simply finding out what resources, companies, and so on are available to meet requirements. If properly conducted, market research assists in applying commercial standards to requirements documents (for example, statements of work). Third, using past performance information in evaluating offerors greatly enhances the chances of reaching a true best-value decision. In addition, once contractors realize past performance is being evaluated, they are more apt to perform better to get more business in the future.[14]

PBSA is a way of describing requirements in terms of desired results and putting those desired results in a contract. It uses measurable performance standards and incentives. The process is not difficult to implement but is different from what has been done in the past. The benefits are obvious, though, and it is important for operational contracting organizations to learn about; educate customers; and ultimately, implement PBSA whenever possible. PBSA goes hand in hand with commercial practices. As Figure 1 indicates, the Air Force goal for commercial actions is high.

If the Air Force is to achieve this goal, initiatives like PBSA must be put into practice on a regular basis.

A second initiative having relevance to both operational contracting and process improvements involves the Air Force purchase card program. The use of the Government Purchase Card (GPC) has increased, thanks to efforts already discussed, that have streamlined processes for small purchases. Unfortunately, with the increased use, the number of improper and fraudulent

activities also has increased. Additionally, an amount of control and visibility has been lost, because many of these small purchase transactions are not captured into databases where the *what* and *why* are tallied. The Air Force Advantage program aims to put control, monitoring, and accountability back into small purchase buying while adding convenience.

Air Force Advantage is very similar to the General Service Administration's (GSA) program, the GSA Advantage. The big difference is that Air Force Advantage is tailored to meet the needs of the Air Force.[15] As mentioned, the GPC program has some limitations and can be ripe for fraudulent activities. Air Force Advantage is an Internet-based, self-service electronic procurement technology. In a sense, it is shopping on the Web, with some differences, of course. With the growing use of the Government Purchase Card for purchases and orders less than $25K, the program decentralization has taken visibility away and increased administrative costs. Air Force Advantage controls what is purchased by ensuring items are procured from approved suppliers. Additionally, what is purchased is monitored to ensure it is legal. This adds up to accountability for purchases without having to wade through a lot of paperwork. All transactions are captured in a database. Air Force Advantage users also have the added benefit of convenience. By going online to make their purchases, they do not have to go to a store for procurements, which saves time, fuel, and vehicle expenses. Air Force Advantage automates the Air Force GPC program.[16]

Conclusions

Interjecting commercial and innovative practices into operational contracting is a logical extension of acquisition reform combined with the increases in outsourcing and continuation of doing more with less. Operational contracting leaders and their personnel must be cognizant of the past, present, and future with regard to increasing commercial actions and embracing innovative practices.

Tools make work easier. New initiatives, if proven worthy, can be thought of as tools. Performance-based service acquisitions and new efforts involving the GPC program are prime examples of new or evolving initiatives that are improving contracting efforts at the operational level. Both involve different ways of thinking and conducting business in the Government, but both increase the use of commercial practices and innovative processes. Operational contracting professionals must become comfortable with as many contracting tools as possible.

People use the tools, so logically, they must be trained and provided an environment conducive to trying new things. Leaders must know their people and know how to motivate them. Leaders must promote innovation while allowing people to *succeed* even if they fail. Leaders must understand the challenges that may or may not be unique to operational contracting organizations. Specifically, they must understand the difference in grade structures. They must understand and make their people understand that the complexity of acquisitions is increasing. Leaders must provide for and promote education for not only their people but also their customers. Finally, leaders must realize that change is inevitable, but with preparation, it can be embraced.

It is hard to move forward when people do not know where they are or where they have come from. Understanding the implications of FASA and FARA, as well as the purpose behind FAR Part 12, is vital to understanding why acquisition reform is

(continued on page 46)

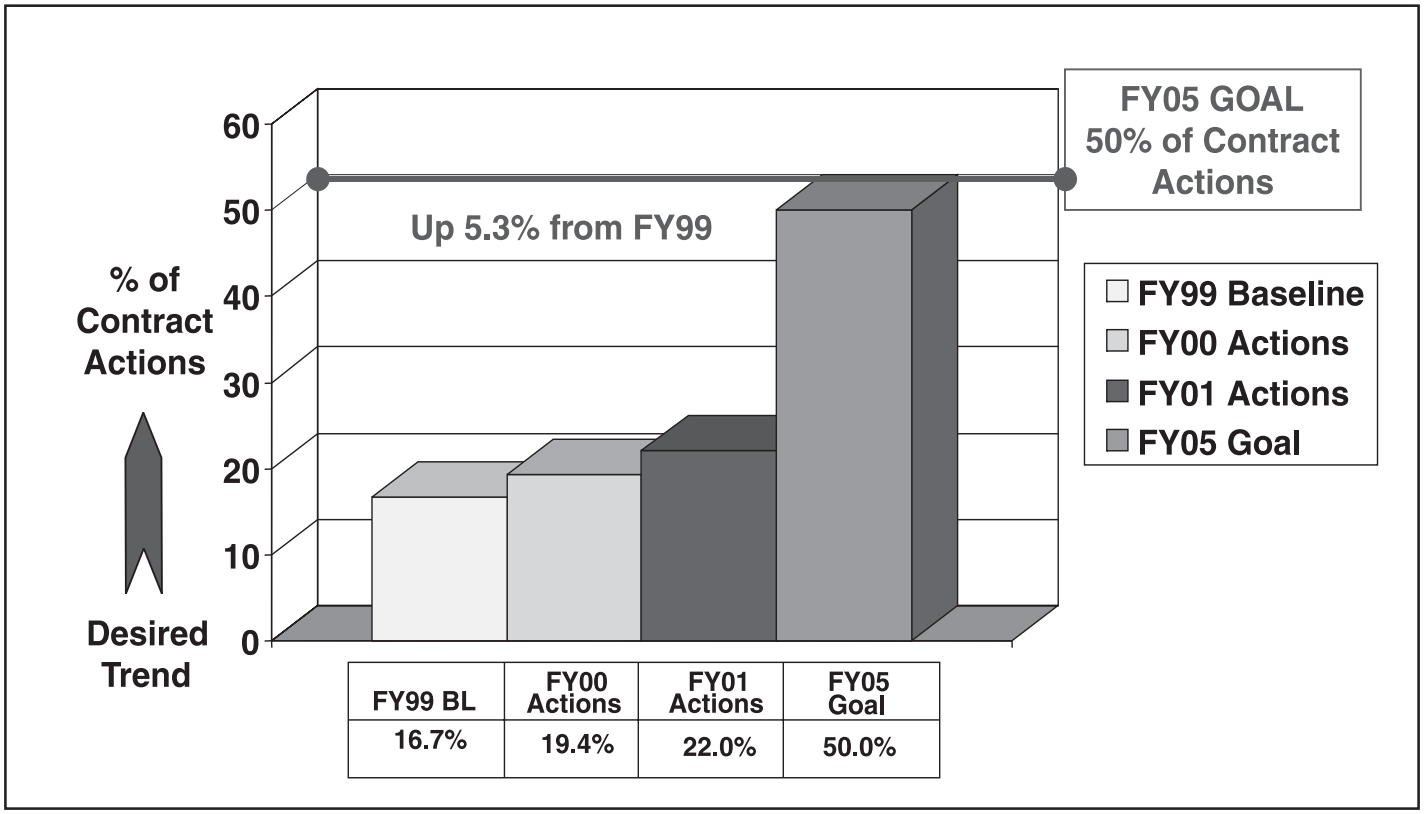

Figure 2. Air Force Totals: Percentage of Commercial Actions

Time-Based Acquisition

Programs

Major Kevin J. Schields, USAF

Time-Based and Time-Phased Requirements within CJCSI 3170.01.

Special Feature

The Secretary of Defense identified priorities, including fixes to our military acquisition system. His letter calls for a joint concept of operations (CONOPS) for integrating military assets and translating the CONOPS to an acquisition strategy. The Secretary identified a further priority of shortening the acquisition time line by 50 percent.[1] Our acquisition programs are challenged by long cycle times, which lead to high program costs, technological obsolescence, threat evolutions beyond our capabilities, and an evolution of requirements to offset new enemy capabilities. One solution is time-based and time-phased requirements. This approach calls for warfighters to define capabilities needed to conduct their assigned military missions and the acquisition corps to deliver goods to fulfill those capabilities with tailored programs. Initial or core capabilities of systems will be delivered to the warfighter with planned follow-on increments to increase a systems capability. To better do this, the warfighting commands can use time-based requirements in their mission needs statements and prioritize specific capabilities within their programs and between competing programs.

Chairman of the Joint Chiefs of Staff Instruction (CJCSI) 3170.01 spells out a framework for defining capabilities needed by combatant commanders. The instruction calls for a top-down approach to defining capabilities rather than the current bottom-up approach.[2] The purpose is to ensure the warfighter has the equipment necessary to conduct operations for the combatant commander. The instruction also sets a standard for developing these capabilities. The Joint Capabilities Integration and Development System (JCIDS) defines tasks and procedures to ensure warfighting needs are met.

The acquisition community can apply time-based requirements and time-phased programs to its practices in two different approaches: the block upgrade approach and a capabilities-set upgrade cycle. The block upgrade approach consists of improvements to existing systems in a sequential manner, achieving capabilities in a time line set by combatant commander needs. The capabilities set combines different weapon systems to field the capability for a combatant commander. This is offset against the new capabilities-set spiral upgrade. The idea behind this approach is to combine weapon systems from all the Services synergistically to achieve greater capability than possible in one system.[3]

Time-based and time-phased requirements is an approach to defining acquisition programs based on achieving an ultimate or final capability in a series of steppingstone increments. The final goal is to bring a needed capability to the warfighter more efficiently. For a time-based and time-phased approach to be effective, all aspects of acquisition programs must use time as an entering argument. New programs must include time in requirements documents, including key performance parameters, to ensure the time to field a new or existing system upgrade is competed efficiently. This approach needs to start at the top of the requirements generation process and work its way through the defense establishment in fulfilling national military and security objectives.

Przemieniecki: Acquisition of Defense Systems

In *Defense Acquisition Systems*, J. S. Przemieniecki defines military acquisition as an extension of the national security policy process, using the military instrument of power. National security objectives and the directives that follow are derived from threat assessments and our concept of operations. We combine these to give us military options. We make strategies and establish missions from these options with the idea of achieving our military objectives. Harold McCord developed this model, discussing the national military policy and our defense acquisition process.[3]

When current military capability does not support these options, we can change our operations, training, and maintenance; modify an existing system (nonmateriel solution); or acquire a new weapon system (materiel solution). Nonmateriel solutions are looked at first since they are usually less expensive and may be able to build on existing systems.[4] Time-based requirements can be used effectively to add clarity to an existing weapon system program with the goal of giving it more capability and to achieve military objectives for the combatant commander.

Joint military operations formally started with the Goldwater-Nichols Act of 1986. This act clarified the roles and responsibilities of the Services as they support national military objectives through the Secretary of Defense. The Chairman of the Joint Chiefs of Staff was given a larger role in forming strategy and contingency planning. This role includes joint planning with combatant commanders' being consulted in the assessment of our military capability. The Chairman also advises the Secretary of Defense on priorities of requirements identification by the combatant commanders. This planning link is the basis for CJCSI 3170.01 in identifying and validating operational military requirements, the priority of those requirements, and how best to fill the need, either materiel or nonmateriel.

This requirements generation system is defined further in Air Force Instruction (AFI) 10-601, *Mission Needs and Operational Requirements Guidance and Procedures*, as being a procedure for developing mission needs and operational requirements into acquisition programs. The instruction details four specific reviews prior to major command (MAJCOM) input for materiel or nonmateriel solutions. The system is set up to plan for acquisition programs for up to 25 years in the future. A *strategy to task* process links tasks for military capabilities to military strategies. This lengthy process ensures buy in from the corporate Air Force by including a team—composed of test, logistics, environmental, safety, health, weather, and acquisition people and other MAJCOMs—to define requirements.[5] AFI 10-601 claims this method will help *streamline* the requirements-generation process and shorten acquisition cycles. However, with all the different levels of review and the fact combatant commanders have no input except to review results, it is hard to imagine this process working as advertised.

Department of Defense Directive (DoDD) 5000.1 further expands on the idea of time-based acquisition, stating, "Validated, time-phased requirements matched with projected capability need an available technology to support the development of evolutionary acquisition strategies." The document also calls for spiral development as the preferred acquisition process.[6] The purpose is to match user needs with a time-based acquisition process to provide military capability and shorten expanded acquisition cycle times. This should reduce problems with the expanded acquisition cycle times of high costs, technological obsolescence, threat evolutions beyond the capabilities being procured, and evolution of user requirements to offset new enemy capabilities. The only input from the commander who is actually fighting a war will not be made until the plan already is done. A commander would be hard pressed to fill warfighting requirements without interaction from the people who make the plans. The new guidance in CJCSI 3170.01, AFI 10-601, and DoDD 5000.1 brings clarity to mission requirements and then translates it into program requirements to reduce the time of acquisition programs.

CJCSI 3170.1 Guidance

CJCSI 3170.01 is focused on a capabilities-based methodology of effects-based acquisition operations to support the joint forces commanders by providing the capabilities and integrated forces required to accomplish assigned missions. Time is an essential component of this methodology, and the effort will focus primarily on ensuring the joint force is properly supported to perform all military operations. As the joint force becomes more integrated and interdependent, a coordinated process will define how the joint force operates and how new capabilities will be defined and developed.

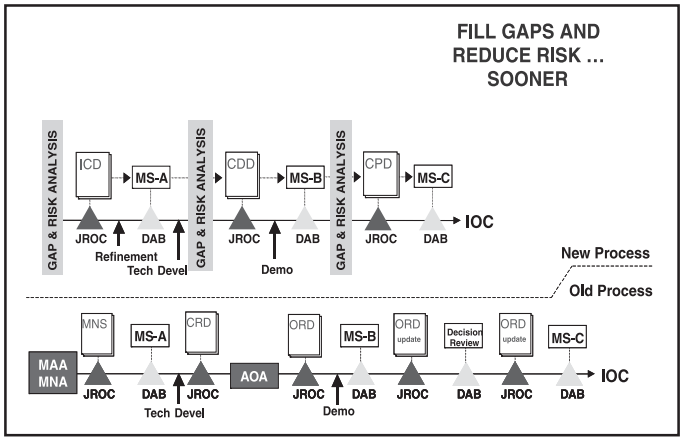

Figure 1. What's the Difference?

The major change is that combatant commanders will have a larger part in identifying deficiencies in their warfighting capabilities. These deficiencies will be translated into needs and requirements. The requirements will be integrated and developed to further military capabilities. This guidance can be changes in doctrine, organization, materiel, training and education, leadership, personnel, and facilities; in other words, the same materiel or nonmateriel solutions we currently concentrate on. The change is that the requirements will come directly from the warfighter as opposed from the Services.

CJCSI 3170.01 is focused on capabilities-based and time-based requirements. Both ideas are central to tailoring acquisition programs to streamline the process of fielding equipment to the warfighter. Capabilities-based requirements will define better what needs to be acquired, and this definition will enable our acquisition community to fill those needs with a time-based system. The change in concept is shown in Figure 1.

The old requirements generation system starts with service programs that react to threats. The new system derives its objectives from combatant commander needs. Service capabilities still will exist and contribute to the effort. They still will organize, train, and equip the forces to be employed by the combatant commander. Their expertise will be called on to fill weapon-system-specific capabilities and projected capabilities to meet the warfighters' needs. The new system in CJCSI 3170.01 deals with requirements generation and the system to translate those requirements into acquisition programs. The new system is the JCIDS.

JCIDS is a change in the way the Department of Defense will approach defining requirements for acquisition systems. The new system will focus on top-down identification of needed requirements from combatant commanders rather than the existing bottom-up requirements generation system. The requirements generation system was a series of bottom-up changes in equipment or doctrine rather than a top-down, capabilities-driven requirement. To contrast this, JCIDS translates strategic guidance into joint concepts of operation (COO). The COO is the basis for prioritizing competing demands to improve joint warfighting capabilities.

An integrated architecture is a set of weapon systems combined to achieve a capability. An example would be different command and control assets such as the Joint Surveillance Target Attack Radar System and Airborne Warning and Control System. Each performs a different task but contributes to overall capability in command and control.

Article Highlights

The warfighting commands can use time-based requirements in mission needs statements and prioritize capabilities within their programs.

Time-based and time-phased requirements is an approach to defining acquisition programs based on achieving an ultimate or final capability in a series of steppingstone increments. The goal is to bring a needed capability to the warfighter more efficiently. This approach needs to start at the top of the requirements generation process and work its way through the defense establishment in fulfilling national military and security objectives.This approach will give combatant commanders a larger part in identifying deficiences in their warfighting capabilities since the requirements will come directly from the warfighter instead of the Services. Commanders at al levels can help this process by continuing to implement this approach even after the current set of commanders moves on.

The biggest change is the fact that evolutionary acquisition ideas are implemented in the JCIDS. CJCSI 3170 states that new acquisition must field systems quickly; a partial solution is acceptable while working toward the 100-percent solution. This is time-based requirements and time-phased programming filling needs defined through COOs.

The joint COOs are based on strategic guidance that is based on our National Military Strategy architecture (National Military Strategy, Defense Strategy, National Security Strategy, QDR, and Defense Planning Guidance). The COO will serve as general guidance to joint forces commanders, outlining the manner in which the CJCS expects warfighting and peacekeeping missions to be carried out. The COOs link overarching national security policy to the joint operating and functional concepts.

Joint functional concepts integrate military capabilities required to accomplish military operations. They are broadly described in the COO and then derive specific context from the joint operating concepts. The joint operating concepts promote common attributes in sufficient detail to conduct experimentation and measure effectiveness. The combatant commander's focus is on a defined functional area but applies across the full range of military operations under review of the Functional Capabilities Board (FCB).

The FCB is a permanently established body responsible for organization, analysis, and prioritization of joint warfighting requirements within an assigned functional area. The Joint Requirements Oversight Council (JROC) will establish the number of FCBs, approve the functional areas, and determine the makeup of each FCB. The FCB is responsible for coordinating, integrating, and deconflicting the efforts of all components within the functional area. The FCB is responsible for the entire doctrine, organization, training and education, leadership personnel, and facilities (DOTMLPF) range of solutions. Each FCB will develop and maintain a prioritized list of DOTMLPF-warfighting requirements within its assigned area.[7] This body can do a lot to further evolutionary acquisition by holding the Services and program offices to time-based requirements and time-phased programs. This body, through the JROC and, hence, the Joint Chiefs of Staff has the authority to prioritize programs and ensure time lines are established, evaluated, implemented, and kept. This top-level oversight is crucial to acceptance and successful implementation of time-based and time-phased requirements. The implementation of this approach lies within three documents: the initial capabilities document (ICD), capabilities development document (CDD), and capabilities product document (CPD).

The ICD is similar to the mission needs statement of the requirements generation system. The mission needs statement details a long-term view of required missions and alternatives, both materiel and nonmateriel, to fill them. The document was developed to fill service needs. The ICD is developed to fill joint warfighting needs spelled out as capability gaps in functional areas. The ICD captures "well-framed functional analysis" previously described in CJCSI 3170 and can include time as a basis for evaluation. The mission needs statement was a long-term view of deficient capabilities. The ICD needs to address short-term as well as long-term views to be effective. Different materiel solutions will be presented and evaluated in this phase. Adding an evaluation for time to fill immediate and short-term needs will go far to fill a capabilities gap. It is another discriminator to be used in evaluating competing systems. This documents the need for a materiel solution and defines the capability gap or other deficiency as described in the applicable functional concepts and integrated architecture.[8]

The CDD is the primary means for the warfighter to provide valid (authoritative, measurable, and testable) requirements to the acquisition community for system development and demonstration. To fill a time-based approach, requirements initially can be a partial solution to full capability. Incremental upgrades or capability can and should be added to achieve the capability ultimately needed by the warfighter. The CDD captures this information via key performance parameters. Key performance parameters can be tied to a timeframe to achieve the capability and a time line for achieving full capability. The CDD is a place to put teeth into the JCIDS. Each succeeding phase of an acquisition program must address the initial capability gap. The ultimate end of full capability must be kept in mind, using the incremental approach of time-based acquisition. Each succeeding increment must be on a path to achieve and document the path to full capability. A new document does not need to be written, just an amendment to the existing plan to guide the development of the newest increment to include another time line. The CDD is similar to the operational requirements document (ORD) of the requirements generation system, but the ORD does not have an incremental approach to filling requirements that are a basic part of the CDD and time-based acquisition. The CDD can be modified easily to add new incremental capabilities.[9]

Finally, the CPD addresses production elements specific to a single increment of an acquisition program for production and fielding of a system. The CPD provides the necessary operational performance parameters in the form of key performance parameters. The key performance parameters will be only for the increment that is being produced and not necessarily for the full capability required. The CPD also will address and refine threshold and objective values for each key performance parameter. A threshold is the minimally acceptable level of performance; the objective is the desired end state. This document can assist the acquisition community if the key performance parameters, their thresholds, and objectives are all tied to a time when the capability is needed. To better achieve full capability, lessons learned from previous increments will need to be applied from all phases of the acquisition program. Requirements need to be tailored to each system to include time.[10] Figure 2 shows the difference between the new and old acquisition time line.[11]

The bottom line is that CJCSI 3170.01 sets the stage for capabilities-based acquisition, starting with the needs of combatant commanders' filling their roles in national military strategy. This capabilities-based system is the first step in time-based requirements and time-phased programs. The authority for the programs comes from the JCIDS process within the structure of the JCS. To fully realize the capability of time-based programs, the acquisition community must integrate time into its key performance parameters, requirements documents, CPDs, ICDs, CDDs, and threshold and objective requirements. The user owes validated, time-based requirements to the acquisition community. The job of the warfighter does not end with the publication of time-based requirements; the warfighter also needs to be responsive to the acquisition community to publish additions

to CDDs, with increments defined, when a new opportunity presents itself. This is a key difference to link JCIDS to a time-based acquisition program successfully.

Time-Based Requirements in Acquisition Programs

Time-based acquisition begins with a living requirements document, including validated, time-based requirements from the warfighter. Acquisition program managers then take those requirements and build their programs around them to overcome the capabilities shortfall. The different weapon system programs will work together to synergistically fill capabilities. The basic flow is described in Figure 3 as the COOs lead to architecture sets of capabilities and then to specific systems to achieve capabilities to fill shortfalls for the combatant commander.[12]

This methodology takes capabilities shortfalls and groups them with systems to overcome those shortfalls. Each system is evaluated based on how well it achieves its objectives and in what timeframe. Redundant programs can be targeted for elimination if they fail to fill a needed capability or fail to fill it in time. A joint approach like this takes into account programs from all the Services. The time-based objectives can be described in the immediate, near, and long term. Immediate needs can be filled in a similar manner to current combat mission needs statements (CMNS). A CMNS is a time-constrained method of filling capabilities to specific programs. AFI 10-601 covers this topic in more detail, and while it is beyond the scope of this article, the capability exists and can be used for immediate needs of the warfighter.

Near-term programs, taking up to 5 years, and long-term programs of 20 years or more can be planned in a more conventional manner. An initial or core capability of a system can be described and programs set up to fill the core need with a requirements document stating the validated requirement, to include a timeframe. Each succeeding increment will have new, validated, time-based requirements to expand the core capability. The MAJCOM staffs will need to work with the acquisition community to describe what capabilities will be included in the core capability and what capability will be added in each successive increment and when the increment will be in place. This also will require coordination with the combatant commander's staff to fill capabilities gaps in a time-based manner. All parties will need to work together to define the full capability each specific weapon system can fill. Further gaps in combatant commander requirements will need to be filled through other programs if the 100-percent solution of a specific weapon system is not able to fill combatant commander needs completely. The plan to deliver the new increment will be similar to the core with respect to a requirements document. An amendment to the requirements document should be produced, stating the added capability and the timeframe for completion. This approach is an existing spiral but has an effects-based and time-phased program to bring capability to the combatant commander. The core system is the initial capability shown in Figure 4.

The core is the capability needed now or in the near future. MAJCOMs, working with combatant commander staffs, will define further needs and the time line for acquiring those capabilities. Rather than a continuous upgrade of a weapon system, the warfighter will accept each incremental capability and the time line for producing it. This approach is set for a synergistic program, like the previously discussed command-and-control example, to bridge gaps in a single weapon system.[13]

The effects-based spiral approach starts with capabilities sets and combines the capabilities of existing and planned systems to fill gaps at specified times. The existing approach uses block upgrades added in serial to expand the capability of an existing weapon system. The F-16 is an example with its block 5, 10, 20, and 30 upgrades added one after the other to the fleet to bring the aircraft a more complete conventional capability to the combatant commander.[14]

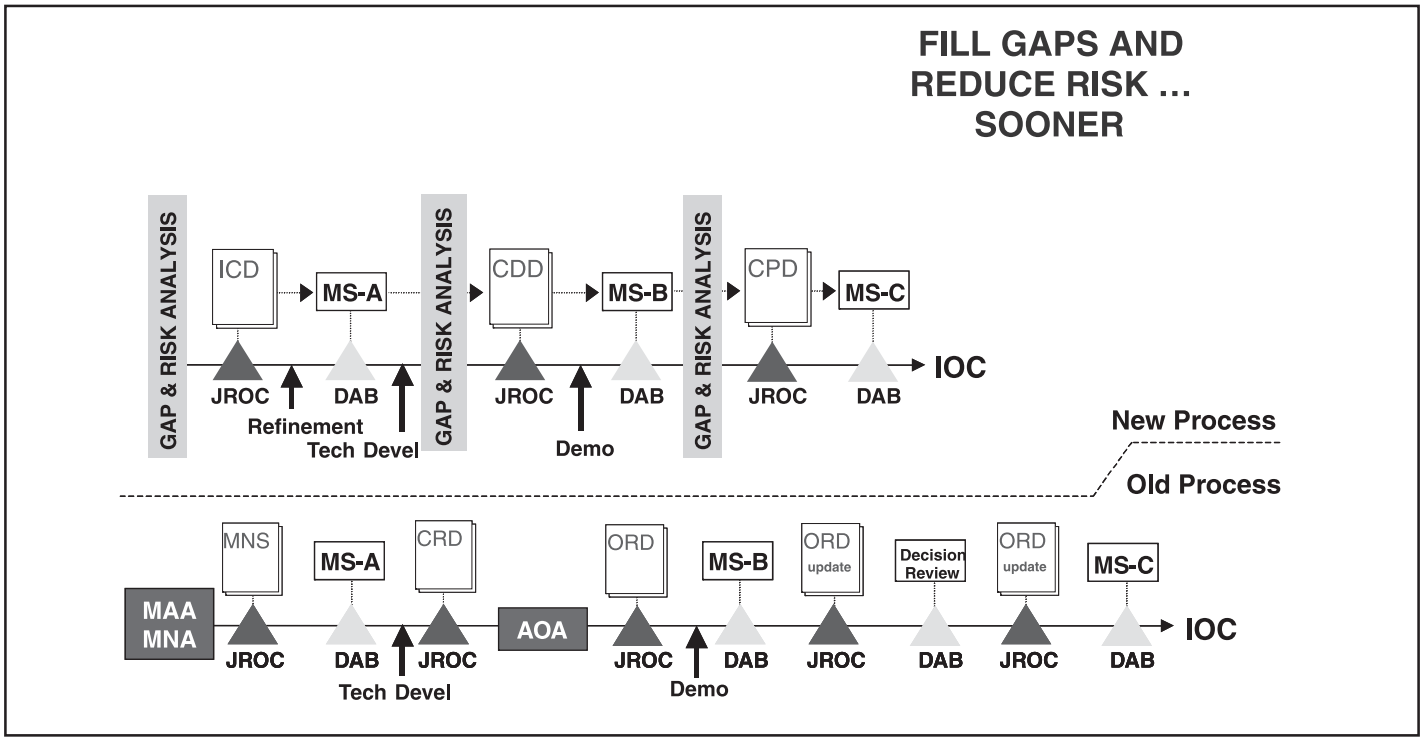

Figure 2. Joint Capabilities Integration and Development

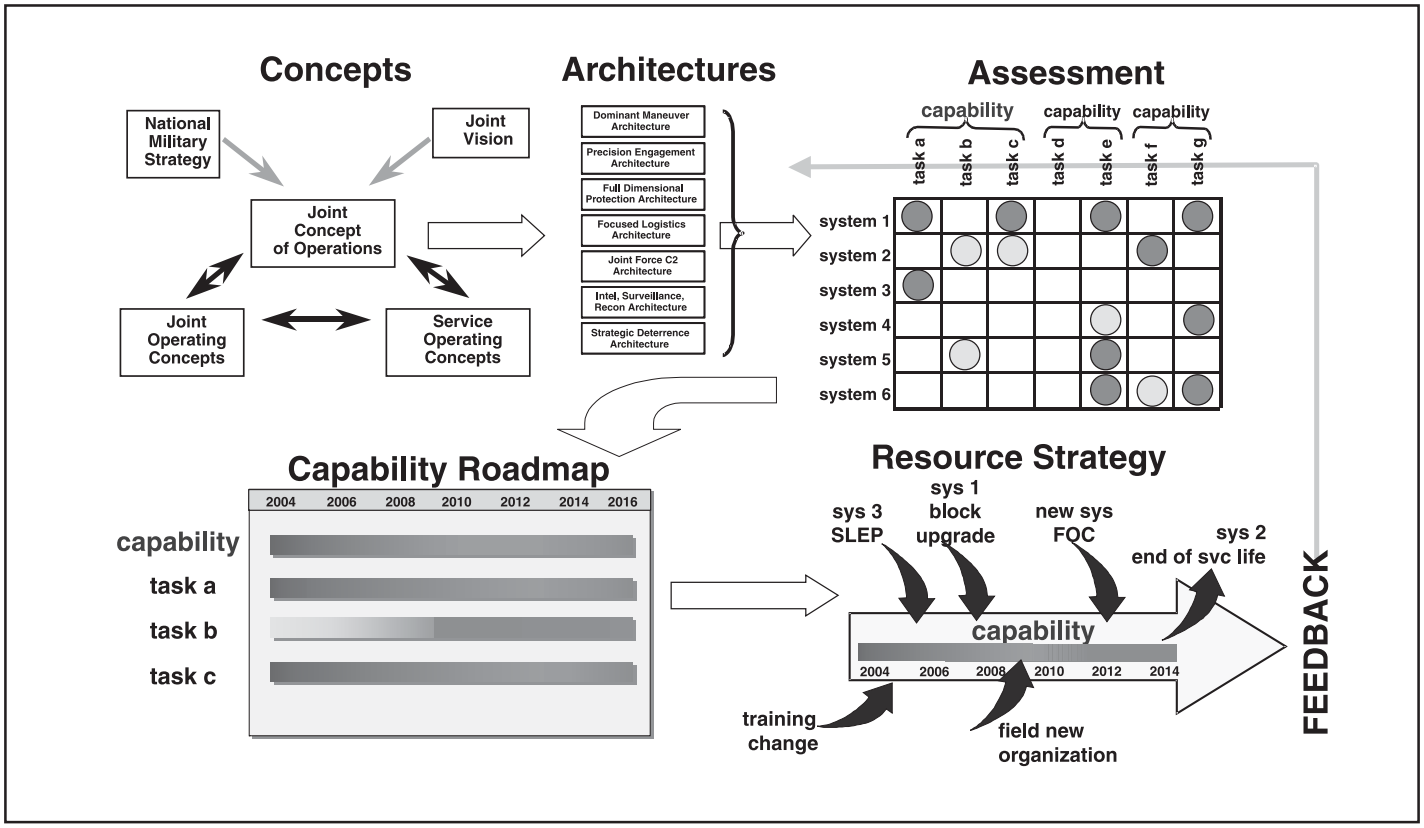

Figure 3. Proposed Methodology

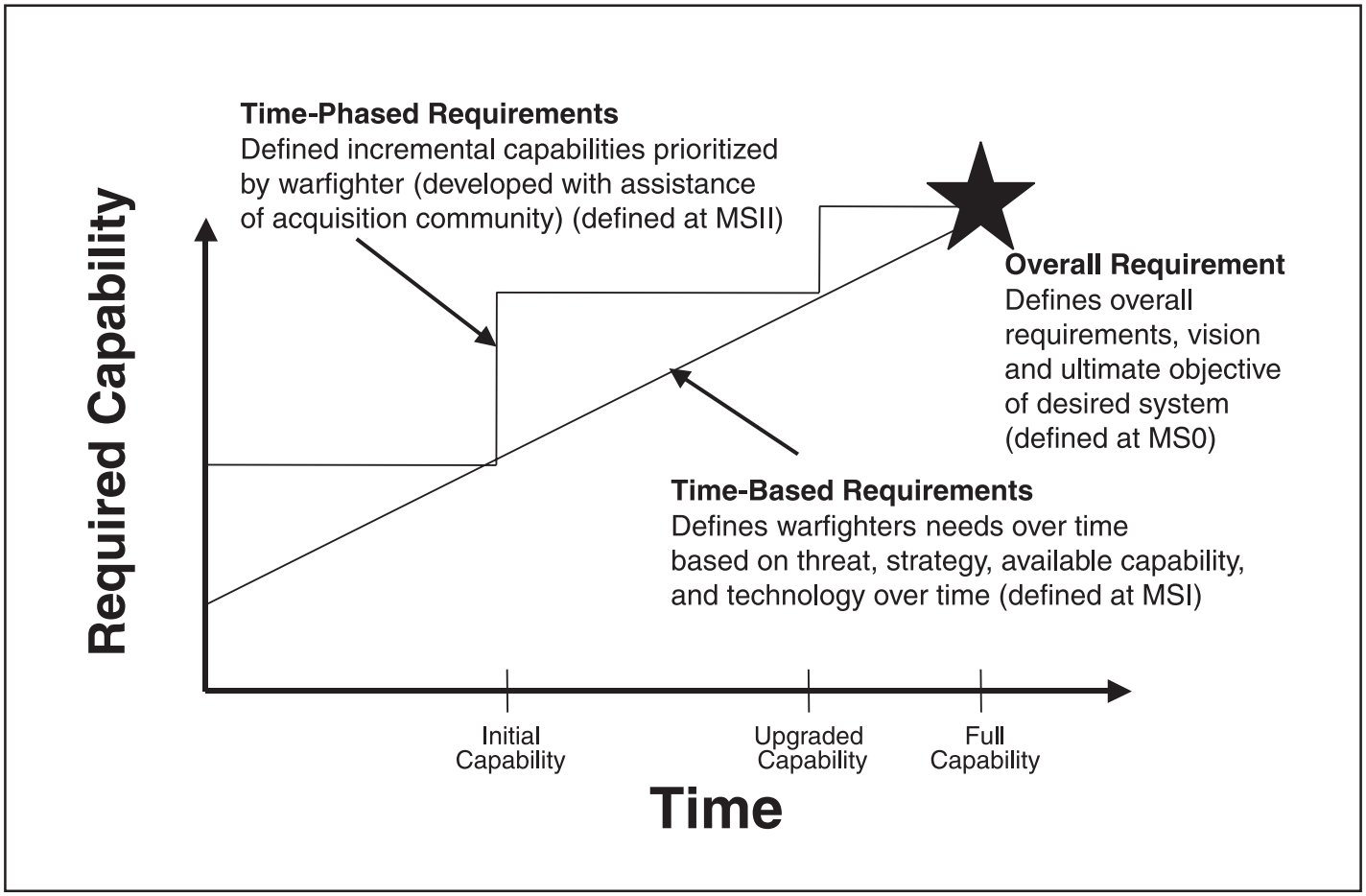

Figure 4. Time-Phased and Time-Based Requirements

The effects-based spiral approach builds on the capabilities of multiple weapon systems to fill a need in an overarching set like command and control. For example, JSTARS and AWACS currently fill our command-and-control requirements. They will have new block upgrades added to them over time to increase their utility to combatant commanders. The next step involves adding new systems to the command and control area with spaced-based radar and MC2A. These systems will have requirements documents that describe the capability to be filled and the timeframe to complete the core program. Each program can have increments added, as described above, to continue to fill gaps in capability. Each upgrade to an existing system adds to the capabilities of the set.

Recommendations

Finally, there are *tasks* to be accomplished by the actors in military acquisition for time-based acquisition to work its best. First, the Office of the Secretary of Defense and the Joint Staff, to include J-8, and JROC will need to put teeth into the time and capabilities-based acquisition initiative. Formative and directive policies will need to be written and enforced to get all the actors working together. This is not to say there will not be conflicts or differences, but the conflict cannot be about buying into the time-and-capabilities-based acquisition system. They also will need to be prepared to cancel programs early if they fail to meet combatant commander needs. Programs canceled early, obviously, cost less in time and money.[15] Basing programs on time, as well as capability, gives commanders a more complete picture of the potential of a specific system. Combining this with a capabilities set of weapon systems will give military and civilian leaders a better idea of the effect of canceling projects that may build on each other, like our command-and-control example above.

Second, the Services will need to buy into the system. Each service probably will arrive at its solution in similar but distinct ways. It is not imperative for the Services to have the same path, only that they achieve the results of a time-and-capabilities-based requirements and acquisition system to fill the needs of combatant commanders. The service staffs also will need to work closely with combatant commander staffs to fully understand capabilities gaps and the time lines required to fill those gaps. Finally, the Services will need to work with the acquisition staffs and program offices to produce requirements documents to include setting time lines to be used for production of upgrade programs.

Third, MAJCOM staffs will need to work with their service and probably other services to identify potential materiel and nonmateriel solutions to capabilities gaps. They also will need to work with the acquisition community in publishing a requirements document, including time-based requirements and time-phased programs. Potential problems include being an advocate of a specific weapon system, as opposed to filling a combatant commander need.

Fourth, the combatant commanders and their staffs need to review the work of the above actors in the time-based acquisition process. Specifically, they need to ensure the time-based work meets their capabilities shortfalls. They will need to work with the JROC staff to approve acquisition programs meeting their gaps in capability. Operational plans will need to be scrubbed for obsolete or outdated information to make sure they are passing on the most correct information to the acquisition community.

Finally, the program offices will need to work with MAJCOM and service staffs in producing requirements documents and designing their programs to focus on time-based requirements and time-phased programs. Clear communication with MAJCOM, service, and joint staffs on program shortfalls will allow staffs to make recommendations to commanders based on prestated priorities and how they will affect a capabilities set of programs. Program offices also need to conduct detailed analysis on time, its costs, and its benefits. Cost of delay and time-tracking methodology are two tools available. Cost-of-delay analysis can shed light on the value of time and performance tradeoffs. This analysis draws comparisons between the value of time and the costs involved with production or development delays. This analysis will enable acquisition program managers to make more informed decisions using combatant commander priorities and the above value analysis. Scheduling and time-tracking tools can be based on user needs and costs associated with program delays. This will lead to a more informed decision to deliver capability to the warfighter.

Mostly, what the acquisition community needs to do is stand up and say there is a cost associated with the time it takes to complete programs. Cost-of-delay analysis and scheduling software will help track and identify schedules and the cost of time. Time is what we can gain from a more efficient acquisition program. And time is, after all, the only unrenewable resource available.

Are these good ideas for the acquisition community in speeding up the cycle time? Yes. We have been organizing and training to fight as a joint force since the 1986 passage of the Goldwater-Nichols Act and for good reason. Our fight today will be a joint action, combining air, land, sea, and spacepower to fill combatant commander needs in the application of military power. If we train and organize as a joint force, it follows we can and probably should equip ourselves as a joint force. CJCSI 3170.01 is a good first step on the path of a more responsive acquisition system. Combatant commanders request forces based on capabilities; they should request needed capabilities in the same manner. This is a good idea, but there are challenges to implementing this program.

The challenges include skepticism from the military community.[16] Is this just another pet program that will change with new commanders? Only time will tell if capabilities-and time-based acquisition continues. Commanders at all levels can help this process by continuing to implement this approach even after the current set of commanders moves on. Second, stable funding will be a challenge for this approach. If we continue to partially fund programs, we will continue to lengthen programs and have similar problems. If we can overcome these challenges, we can give combatant commanders the capabilities they need in a useful time line. If not, it may be just business as usual.

Conclusion

The military acquisition program is challenged by long cycle times. This long acquisition time line can lead to high program costs, technological obsolescence, threat evolutions beyond our capabilities being procured, and an evolution of requirements

to offset new enemy capabilities. A time-based program is one solution to combat these problems. A time-based program is tailored to deliver a core capability to the warfighter in the near term and then add incremental capabilities in a time line defined by combatant commanders and their needs.

CJCSI 3170.01 spells out a top-down, capabilities-based framework for defining capabilities. The instruction also sets a standard for developing these capabilities. The Joint Capabilities Integration and Development System defines tasks and procedures to ensure warfighting needs are met.

The acquisition community can apply time-based requirements and time-phased programs in either a block upgrade approach or a capabilities-set upgrade cycle. Both systems deliver capability to the warfighter. The block upgrade approach is an existing system to add capability, one weapon system at a time. The capabilities-set approach combines weapon systems to achieve a capability for the combatant commander and then upgrades systems to capitalize on the synergy created by many assets, working together to achieve effects for the warfighter.

Time-based and time-phased programs apply the framework of CJCSI 3170 to bring capability to the warfighter more quickly. All actors in the acquisition process must participate fully in the system for it to be effective. New programs must include time in requirements documents, key performance parameters, and threshold and objective requirements to ensure the time to field a new or existing system upgrade is competed efficiently. This approach needs to start at the top of our requirements generation process and work its way through the defense establishment to assist in fulfilling our national military and security objectives.

Notes

1. Office of the Secretary of Defense. Memorandum for Secretaries of the Military Departments. Washington DC, 17 Sep 02.
2. CJCSI 3170.01C, *Joint Capabilities Integration and Development System* draft, 20 Jan 03.
3. J. S. Przemieniecki, A*cquisition of Defense Systems,* Washington DC, American Institute of Aeronautics and Astronautics, Inc, 1993.
4. Maj Ross McNutt, "Project Portfolio Management," lecture, Air Command and Staff College, Maxwell AFB, Alabama, 11 Mar 03.
5. AFI 10-601, *Mission Needs and Operational Requirements Guidance and Procedures*, 13 Aug 99.
6. DoDD 5000.1, *The Defense Acquisition System,* Atch 1.
7. CJCSI 3170.01C.
8. *Ibid*.
9. *Ibid*.
10. *Ibid*.
11. Lt Col Jude Fernan, "Joint Requirements Oversight Council Joint Warfighting Capability Assessment Joint Requirements Determination," lecture, Air Command and Staff College, Maxwell AFB, Alabama, 2 Apr 03.
12. *Ibid*.
13. Maj Ross McNutt, personal papers and notes, 15 Mar 03.
14. Headquarters US Air Force, *PEM/AO Survival Guide,* Washington DC [Online] Available: http://www.safaq.hq.af.mil/training/pemaosurvivalguide/.
15. Maj Ross McNutt, "Evolutionary Acquisition, Spiral Development and Time-Based Time-Phased Requirements," lecture, Air Command and Staff College, Maxwell AFB, Alabama, 4 Mar 03.
16. Author's interviews with Larry Krussel, Langley AFB, Virginia, 24 Feb and 24 Mar 03.

Major Schields is Chief, Foreign Materiel Program Branch, Directorate of Test and Evaluation, Headquarters Air Force. At the time of the writing of this article, he was a student at the Air Command and Staff College.

Excellence in Writing Contest

Open to Military and Civilian Authors

Category 1 - History of Logistics

- 3,000 - 7,500 words in length
- Single or multiple authors
- Focus area - 20th century

Category 2 - Logistics Analysis

- 2,500 to 5,500 words in length
- Single or multiple authors
- Focus area - evolutionary logistics in the 21st century

All Submissions Due by 31 August 2004

Judges from Industry, Academia, and the Military

Winners Announced 30 September 2004

Winning Article in Each Category—$100 Prize

The preferred method of submission is via electronic mail (e-mail) to: editor-AFJL@maxwell.af.mil. Manuscripts can also be submitted in hard copy. They should be addressed to the *Air Force Journal of Logistics*, 50 Chennault Circle, Maxwell AFB, AL 36112-6417. If this method is used, a 3.5-inch disk, Zip disk, or compact disk containing an electronic version of the manuscript should accompany the hard copy. Regardless of the method of submission, the basic manuscript should be in Microsoft Word or WordPerfect format, and all supporting tables, figures, graphs, or graphics must be provided in separate files (preferably created in Microsoft Office® products; if Microsoft Excel is used to create any of the charts or figures, the original Excel file must be supplied).

Top Three Articles in Each Category Published in the *Air Force Journal of Logistics* and a Separate Monograph

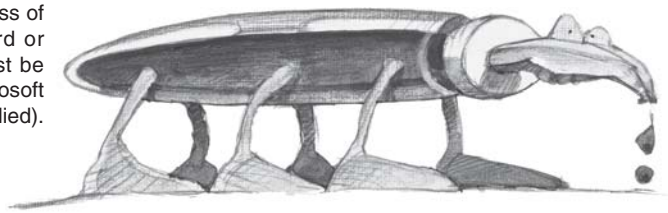

Sponsored by the Air Force Journal of Logistics and Air Force Logistics Management Agency

Featured Reading

Cost analysts need to increase productivity or identify and concentrate on areas that encompass the majority of estimation error risk in order to meet the demand.

logistics analyses

Flyway Costs Versus Individual Components of Aircraft: An Analysis

The 1990s saw the budgets for acquisition programs steadily shrink. Concurrently, an increased operations tempo and aging weapon systems and weapon system components put a great deal of pressure on Air Force operations and maintenance accounts. While acquisition budgets have improved, there are still significant issues to be resolved. One area at issue is the acquisition and cost analysis environment. That environment today is characterized by budget instability, time constraints, and changing objectives. With that as a backdrop, Captain Ritschel and his coauthors investigate and measure the risks associated with taking a macro versus a micro approach to aircraft cost estimation. By examining the fidelity of a cost estimate developed at the cost level versus the individual component level, they argue that guidelines can be developed for the allocation of cost analysis resources.

Flyaway Costs Versus Individual Components of Aircraft: An Analysis

Captain Dan Ritschel, USAF
Major Michael A. Greiner, USAF
Daniel E. Reynolds
Michael J. Seibel

Background

A shrinking workforce, unstable budgets, and rapidly changing objectives, under stricter time constraints, characterize today's cost analysis and acquisition environment. The result is that today's cost community is being asked to do more with less.[1] This is driving the need for cost analysts to increase productivity or identify and concentrate on those areas that encompass the majority of estimation error risk in order to meet the demand.

Reductions in manpower have impacted operation-level organizations such as the Aeronautical Systems Center (ASC) cost analyst resources at Wright-Patterson AFB, Ohio. Since 1992, ASC's total authorized cost analyst slots have declined by 54 percent, from 136 authorizations to only 63 in 2001. This includes a 69-percent loss of military slots and a 44-percent drop in civilian authorizations.[2]

The current aircraft acquisitions environment presents several challenges to the cost analysis community. First, cost analysts must operate within the reality of a smaller workforce, while accomplishing their mission of providing the best possible cost analysis and estimating for their program. Second, cycle-time reduction goals require cost analysts to complete estimates in a compressed timeframe. Finally, in this unpredictable environment, cost analysts do not have the luxury of knowing estimation requirements in advance. Thus, the ability to accomplish data collection in support of developing low-level, grassroots estimates will be reduced greatly.

Despite these changes in time, manpower, and predictability, it is extremely important that weapon systems perform at optimal operating capabilities. Achieving this objective necessitates the highest quality of work from cost and acquisition personnel. "With budgets shrinking and requirements steadily growing, the Department of Defense (DoD) has focused logically on initiatives to increase efficiency."[3] Determining methods to meet these challenges is imperative for cost analysts in today's environment. To keep the quality of work high—with less personnel, increasing programs, and dynamic technology—analysts will be required to increase not only productivity but also efficiency. To achieve increased productivity and efficiency under these conditions, cost analysts must recognize the greatest estimation error risk in a new weapon system. Efforts must be concentrated in these high-risk areas when developing an aircraft cost estimate.

The purpose of this article is to investigate and measure the risks associated with taking a macro versus a micro approach to aircraft cost estimation. By analyzing the fidelity of a cost estimate developed at the flyaway cost level versus at the individual component level, this research provides guidelines for appropriate allocation of cost analyst resources in today's constrained environment. Flyaway costs for aircraft are defined as follows:

> It relates to production cost and includes the prime mission equipment (basic structure, propulsion, electronics), systems engineering, program management, and allowances for engineering changes and warranties. Flyaway costs include (all) recurring … production costs (contractor and government-furnished equipment) that are incurred in the manufacture of a usable end-item.[4]

In particular, two categories of aircraft will be considered: fighters and intertheater airlift. Intertheater airlift is those aircraft

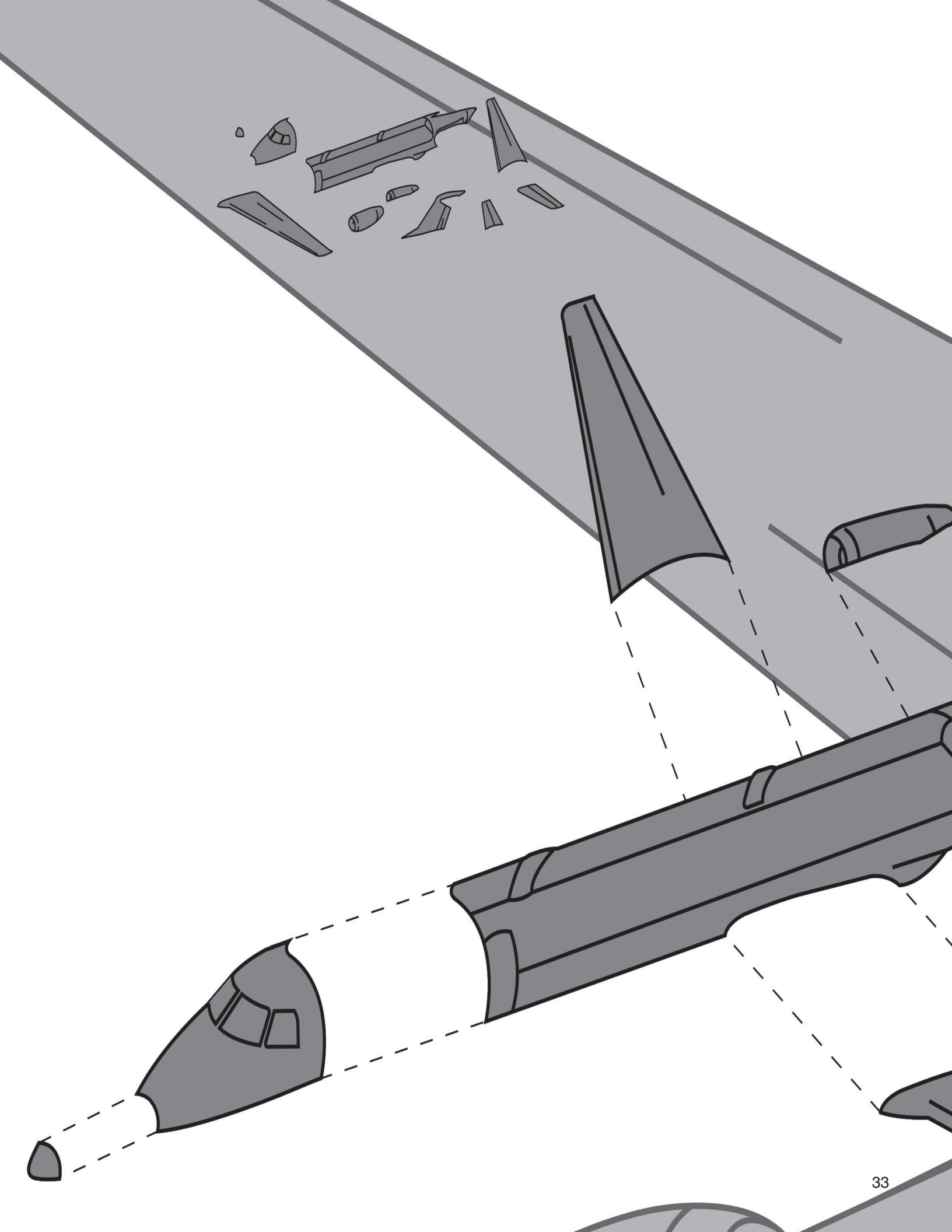

used for supply and transportation. The following questions regarding each of these categories will be addressed:

- Which aircraft components have the most cost-estimation error risk, and what is that risk?
- What is the cost-estimation error risk associated with estimating at the flyaway cost level?
- Is there a statistically significant difference in estimating at the component level versus flyaway level?
- Given a constrained resource environment, where should cost analysts focus their attention when developing an aircraft cost estimate?

Previous Literature

This literature review focuses on the fundamental components and techniques used to develop an aircraft cost estimate. First, a discussion of the basic building block for any cost estimate, the work breakdown structure (WBS), is examined. Next, the role of cost-estimating relationships (CER) in aircraft estimation is explored to understand why and how they are used. Then an explanation of aircraft cost-estimation techniques, specifically the parametric and grassroots methods, are covered. Finally, an overview of research accomplished on comparisons of macro and micro aircraft estimation techniques is investigated.

Work Breakdown Structure

The work breakdown structure is a basic building block of all major defense acquisition programs. As such, DoD Regulation 5000.2-R mandates, "A program work breakdown structure shall be established that provides a framework for program and technical planning, cost estimating, resource allocation, performance measurement, and status reporting."[5] In addition to developing a work breakdown structure, every program office is required to tailor its work breakdown structure using the guidelines set forth in Military Handbook Standard 881 (MIL-HDBK-881).

This research focused its comparisons between level one and level two of the work breakdown structure to facilitate the macro versus micro properties. Level two is selected as the micro level because of data availability and the fact, "Level two of any work breakdown structure is the most critical, because at level two, the project manager will indicate the approach planned to manage the project."[6]

Level one of the work breakdown structure is the entire defense materiel item, represented in this research by a complete aircraft system. Level two of the work breakdown structure is the major elements that comprise the aircraft system. Level two includes equipment-specific elements and common elements found in all major weapon systems. These common elements include systems engineering and program management, training, data, system test and evaluation, and so on. The guidelines for the WBS structure of an aircraft system come from MIL-HDBK-881.[7]

WBS Terminology Clarification

While the suggested WBS structure is being followed for data collection and analysis purposes, there are some terminology differences between MIL-HDBK-881 and the subsequent language used to describe the data collected. Specifically, at WBS level one, the term flyaway cost is substituted for aircraft system. This change was made because program office costs and costs not directly related to the contractor are not being considered. At WBS level two, the term basic airframe was substituted for air vehicle. Also, the common elements of system engineering and program management, system test and evaluation, data, and training are reclassified into a single category called other air vehicle. The form of the available data for collection drives these changes.

Cost-Estimating Relationships

The CER is one of the fundamental techniques used to estimate aircraft cost. A CER is defined formally as a "technique used to estimate a particular cost or price by using an established relationship with an independent variable."[7] The dependent variable is the item of interest that the CER will estimate (for example, airframe cost). The independent variables are composed of a multitude of explanatory variables. The CER is a mathematical relationship that predicts the dependent variable as a function of the independent variables. This relationship typically is using a historical data set of variables and applying a statistical technique, usually regression, to find the parameter estimates of the independent variables.[8]

The selection of independent variables is extremely important. To ensure an accurate and meaningful CER is developed, the independent variables must be identified as cost drivers for the dependent variable. "Cost drivers are those characteristics of a product or item that have a major effect on the product or item cost."[9] Typically, performance parameters are the most useful and accurate independent variables; however physical and technical variables are common in CERs. Identification of cost drivers to include in the CER depends on the type of CER being developed. Depending on the life-cycle phase of the program, CERs can be categorized into three types: research and development, production, or operating and support.[10] This research focused on aircraft production CERs. Previous research identified conventional cost drivers for aircraft CERs, to include empty weight, speed, useful load, wing area, power, landing speed, and production quantity.[11]

CERs are prevalent in many different cost-estimation techniques. They are the cornerstones of the parametric estimation technique developed by the RAND Corporation in the 1950s to predict the cost of aircraft.[12] As such, it is now the primary component underlying most commonly used parametric software estimating suites.[13] The versatility of CERs can be shown by their cross utilization among other estimation techniques. The grassroots technique uses CERs to develop detailed labor and material estimates, which are then summed as components of the total estimate.[14] Because CERs are versatile and widespread, they can be found in virtually every cost analyst's toolbox.

There are several characteristics that make CERs desirable across these cost-estimation techniques. First, they are able to "provide quick estimates without a great deal of detailed information."[15] This is important since a CER can be used early in a program's life, before any actual data are available, to forecast and plan for future budgets. Second, because CERs are based on historical data, they incorporate the impacts of system growth, schedule changes, and engineering changes.[16] These changes are a fact of virtually every DoD program. Because these items are part of the historical data, the CER is able to give a more realistic picture of the future. Most important, CERs have proven to be good predictors, which is the goal of any cost-estimation technique.

Aircraft Estimation Techniques

A variety of techniques for developing aircraft cost estimates is available to the cost analyst. The two ends of the estimation technique spectrum are parametric estimation and grassroots estimation. The parametric estimation technique can be considered a macro approach to cost estimation, while the grassroots approach is consistent with a micro approach to cost estimation.

Parametric Estimation. In today's acquisition environment of doing more with less, parametric estimating has become a common tool for the cost analyst. Parametric estimation can be defined as:

> A technique employing one or more CERs and associated mathematical relationships and logic. The technique is used to measure and/or estimate the cost associated with the development, manufacture, or modification of a specified end item. The measurement is based on the technical, physical, or other end item characteristics.[17]

The CERs developed to populate the parametric cost model are typically derived through nonexperimental regression techniques.[18]

The parametric cost model represents the macro approach to estimation for several reasons. First, the focus is on high-level cost drivers and high-level data from which trends can be extracted.[20] Second, the parametric method often is used early in the acquisition cycle when program and technical definition is limited. At this point in the life cycle, the details needed to develop a comprehensive estimate are scarce, so the parametric estimate is a more useful estimation tool. Finally, capturing total program costs can be accomplished with a single parametric model.[21] This one-size-fits-all approach can be characterized as a macro technique.

Grassroots Estimation. The grassroots technique for cost estimation is synonymous with the phrases *detailed, bottom-up,* and *engineering buildup.*[22] As implied, the underlying crux of a grassroots estimate is to start at the lowest level of the work breakdown structure, estimate the components, and sum their parts. For this reason, the grassroots estimation technique is categorized as a micro approach to cost estimation.

Applicable Past Research

This research is the first of its kind to explore a statistical comparison of micro versus macro cost-estimating techniques. A critical component for this comparative analysis is the development of CERs for level one and level two WBS elements. The RAND Corporation is a leading organization in analyzing and hypothesizing aircraft CERs.[23] RAND studies on estimating aircraft airframe costs date back to the 1960s. Several components of these studies are relevant to this research effort. For example, while analyzing airframe components for a study, CERs were developed at the lowest level and compared to the aggregate level. In addition, RAND has examined the benefits and detriments to segregating CERs by aircraft categories. RAND also has completed extensive research in identifying those explanatory variables that are of most significance when developing regression models for aircraft airframes. This research examined elements of these studies, to include the segregation of aircraft by categories, identifying explanatory variables to derive CERs, and analyzing the validity of micro versus macro cost-estimation techniques.

Methodology Overview

The analysis began by segregating the aircraft cost data into the aircraft category subsets of fighter and intertheater airlift and by their macro and micro components of flyaway cost, basic airframe, and other air vehicle. Next, multiple regression equations were developed for each of these categories, six total. A Monte Carlo simulation then was applied to these regression equations. Specifically, the bootstrap technique is used to estimate the standard error of the equations. The resulting distribution from the differences of the standard error of the micro (basic airframe and other air vehicle) versus macro (flyaway cost) equations was analyzed to answer the original research questions.

Data

Total cost and component cost data for aircraft are required for this micro versus macro analysis. Two primary sources were used to gather data. The main source of data was the *Cost Estimating System*, Volume 2, *Aircraft Cost Handbook*, Book 1: Aircraft, November 1987, which was prepared for the Air Force Cost Analysis Agent by Delta Research Corporation. This data source provided information on the F-15, F-16, F-18, B-1, C-5, C-130, and C-141. The Delta Research Corporation generated the data for its study through interaction with the system program offices, contractor cost data reports, and their associated contractors. In addition to the data gathered through the Delta Research Corporation study, data were collected directly from the system program offices for aircraft under consideration that were not included in the study. This applies to data from the C-17.

The primary benefit of using data from the Delta Research Corporation is that they are normalized to constant year 1987 dollars. The C-17 data were adjusted manually through the use of Office of the Secretary of Defense inflation indices to normalize to constant year 1987 dollars. This normalization provides a homogeneous database for the purpose of analysis.

Although both recurring and nonrecurring cost data were available, only recurring data were used for this analysis. Recurring costs are incurred on an ongoing basis, such as final assembly, while nonrecurring costs are made up of one-time expenses such as initial tooling and production planning. Because these two categories are influenced by different sets of predictors, they typically are estimated separately by cost analysts. Not separating them for this analysis would add unnecessary variance to the results, hampering a comparison of the macro and micro techniques.[23]

To facilitate the analysis, the data were segregated into two distinct categories, based on aircraft type, to achieve homogeneity in the data sample. The two categories are fighters and intertheater airlift. The fighter category is composed of the F-15, F-16, F-18, and B-1. The intertheater airlift category consists of the C-17, C-5, C-130, and C-141. In addition to segregation by category, the data also will be subdivided by WBS level. This WBS breakdown will consist of flyaway cost, which is analogous to level one of the work breakdown structure. The two analogous components for WBS level two are the basic airframe costs and other air vehicle costs.

Data Limitations

There are two limitations with these data. The major limitation is that the majority of the data are from pre-1987. This is because of the limited availability of the Delta Research Corporation

database. Since there are not much data available from newer systems such as the F-22 or joint strike fighter, this is not a debilitating limitation. However, research would benefit from obtaining additional data points from more recent history. The other limitation results from the WBS-level breakdown. Once again, because of the available data, a comparison between level one and level two of the work breakdown structure is analyzed. Practitioners may object that cost estimation normally does not occur at level one. Thus, future research may want to look at a different database that can be broken down for a level two versus level three comparison.

Variables

The development of high-fidelity CERs is crucial to making an accurate micro versus macro cost comparison. The variables, especially the independent variables selected, play a critical role in this CER development process. The dependent variable was cost since the goal of this research was to determine whether there is a difference in the resulting cost estimates based on the approach taken. Research has demonstrated that performance parameters are the most useful and accurate independent variables used for aircraft CERs.[24] Additionally, the RAND Corporation has published several studies that indicate weight and speed are the most important variables for aircraft CERs.[25] Therefore, performance parameters, physical characteristics, and technical variables all will be considered as independent variables in developing the aircraft CERs to ensure a robust model. The independent variables investigated for inclusion in the model are found in Table 1.

Regression

A multiple regression methodology will be used to develop the aircraft CERs. In total, six regression equations will be developed in the form of:

$$Y = \beta_{\circ} + \beta_{+} X_{+} + \beta_{-} X_{-} + \epsilon$$

where Y is the dependent variable (cost), β is the regression coefficient, X is the independent variables, and ϵ is the error term. The six regression equations consist of a flyaway cost, basic airframe, and other air vehicle equation for each of the two categories: fighters and intertheater airlift.

Monte Carlo Simulation

After the development of the regression equations is complete, the use of a Monte Carlo method is applied. The term Monte Carlo is very generic, as it can be applied to a multitude of differing methods.[26] "In a Monte Carlo method, the quantity to be calculated is interpreted in a stochastic model and, subsequently, estimated by random sampling."[27] Therefore, for an experiment to be considered a Monte Carlo experiment, it must involve the use of random numbers to examine a problem. This technique can be applied to a variety of problems.

The Monte Carlo simulation will generate multiple outcomes for the regression equations for basic airframe, other air vehicle, and flyaway costs. Commercially available software, Crystal Ball, is implemented to accomplish this simulation. The error terms from the regression equations are modeled as random variables with a probability distribution. These errors will follow a normal $(0, \sigma^3)$ distribution because of the underlying assumption of normality of the residuals from the regression.

> To perform simulation in a spreadsheet, we must first place a random number generator formula in each cell that represents a random, or uncertain, independent variable. Each random number generator provides a sample observation from an appropriate distribution that represents the range and frequency of possible values for the variable.[28]

Bootstrap

The bootstrap technique and *resampling* are intrinsically tied. The underlying construct behind bootstrap resampling is that the original sample is considered the best estimate of the population. The resampling occurs as one samples the sample.[29] Thus, the essence of the bootstrap technique is:

> That in many complex situations, where bootstrap statistics are awkward to compute, they may be approximated by Monte Carlo "resampling." That is, same-size resamples may be drawn repeatedly from the original sample, the value of a statistic computed for each individual resample, and the bootstrap statistic approximated by taking an average of an appropriate function of these numbers.[30]

Figure 1 illustrates how a simple bootstrap sample is constructed. It is important to note that sampling occurs with replacement.

The bootstrap technique is used widely with regression equations. Previous research on estimating the standard error of multiple regression equations found "model-based resampling will give adequate results for standard error calculations."[31] The specific regression resampling approach required for this research is the Fixed X, residual resampling.[32] This approach, as proposed by Stine, is a two-step process. First, a regression model must be fit and the residuals computed. Second, the bootstrap data are generated by

$$Y^* = (\text{Fit}) + (\text{BS sample of OLS residuals})$$

Dimensions (Feet)	Weight (Pounds)	Engines	Performance	Fuel	Quantity
Wingspan	Airframe Unit Weight	Number of Engines	Takeoff Weight	Max Fuel Internal	Lot Number
Wing Area (square feet)	Empty Weight	Max Static Thrust Sea Level	Takeoff Run SL (feet)	Max Fuel External	Cumulative Quantity
Length Wingspan	Max Gross Takeoff Weight		Max Speed SL (knots)		
Height	Max Landing Weight		Max Altitude (knots)		
Tread					
Wheelbase					

Table 1. Independent Variables Considered for CER Development

Original process
Population $\rightarrow (\boldsymbol{X}_1, \boldsymbol{X}_2, ..., \boldsymbol{X}_n) \rightarrow \bar{\boldsymbol{X}}$
Resampling process
BS Sample 1: $(\boldsymbol{X}_3, \boldsymbol{X}_7, ..., \boldsymbol{X}_2) \rightarrow \bar{\boldsymbol{X}}_1^*$
BS Sample 2: $(\boldsymbol{X}_8, \boldsymbol{X}_1, ..., \boldsymbol{X}_1) \rightarrow {}^*\bar{\boldsymbol{X}}_2$
....
BS Sample B: $(\boldsymbol{X}_4, \boldsymbol{X}_9, ..., \boldsymbol{X}_{11}) \rightarrow \bar{\boldsymbol{X}}^*_B$

Figure 1. Constructing Bootstrap Samples[36]

where Y^* is the dependent variable and Fit is the Fixed X portion of the regression equation. It is important to note that, under this method, the "residual resampling keeps the same Xs in every bootstrap sample."[33]

Application of the Bootstrap, Monte Carlo, and Crystal Ball. The idea of a bootstrap is to estimate a characteristic (X^*) of a population distribution, such as the standard deviation or mean, "by resampling from a distribution determined by the original sample X."[34] Monte Carlo techniques and Crystal Ball can be used in combination to apply this bootstrap technique.

The statistic of interest for the macro versus micro comparison in this research is the standard error of the regression equation. Using the bootstrap function in Crystal Ball, the regression equation as the forecast cell, and the residual normal (0, σ^2) distribution as the assumption cell, the standard error can be calculated for each equation. "As a rule of thumb, about 200 samples are needed for finding a standard error."[35]

Drawing Conclusions. The distribution resulting from the pairing of the data points from the bootstrap results will be examined. An analysis of this distribution, to include the mean and a 95-percent confidence interval around the mean, will be used to determine if the mean is significantly different from zero. If it is not different from zero, it can be concluded that the error of the two equations is statistically equivalent. If the means are statistically different, it can be concluded that there are different risks from taking a macro versus micro approach to cost estimation. Analysis of these risks at the various WBS levels enables decisions to be made about appropriate allocation of resources. Specifically, it will be possible to determine whether more resources should be allocated to the basic airframe or to the other air vehicle category.

Analysis for Multiple Regression Models

Data for Fighter Category

The data for the fighter category come from the Delta Research Corporation's report. The four aircraft under consideration are the F-15, F-16, F-18, and B-1. These aircraft were chosen for three reasons. First, they are all operational aircraft currently used by their respective service. Second, multiple production data points are available for analysis. Multiple data points enhance the probability of generating a robust model, which is imperative for conducting the regression analysis. It is important to note that this condition eliminated next-generation aircraft such as the F-22 or joint strike fighter, which do not have production data. Third, the characteristics of these aircraft provide a natural grouping that allows for a homogeneous database. The final database consisting of the four aircraft has 47 data points.

Data for Intertheater Airlift Category

The data for the intertheater airlift category come from two sources, the Delta Research Corporation report and system program offices. The four aircraft under consideration are the C-130, C-141, C-5, and C-17. These aircraft were chosen for several reasons. First, they are all operational aircraft currently used by their service. Second, there are multiple data points available from which to conduct the analysis. Third, the characteristics of these aircraft provide a natural grouping that allows for a homogeneous database.

Development of the regression model for the basic airframe, other air vehicle, and flyaway cost all had one common result. The parameter estimates for the C-141 data were found to be insignificant in all models. As the C-141 had the least amount of data points, this is not a major limitation, and the C-141 data were discarded.

Preliminary Modeling Problem

Initial development of the regression models included consideration of all the independent variables listed in Table 1. As shown in Table 2 with a portion of the F-16 data, there is duplicity in many of the independent variables. For example, although the average lot cost decreases as subsequent lot buys occur, the wing area remains constant at 300 square feet. While the learning curve effect is captured with variables such as cumulative quantity and lot size, a bias is introduced into the regression by the duplicate independent variables.

There are two potential solutions to this problem. First, changes in the performance parameters and physical characteristics occur as the aircraft changes (that is, from an F-15 to an F-16) and as the aircraft model changes. For instance, when the F-15 was updated to the C model, the maximum internal fuel characteristic changed. Thus, one way to model the regression is to make a qualitative independent variable that represents an aircraft that has the same performance parameters and physical characteristics. The learning curve portion of the regression model still would be captured through independent quantity variables. A major benefit to this approach is that all 47 data points would remain in the model. The major detriment to this approach is that the independent variables may not be meaningful to the practitioner. However, it is important to note that the objective is not to have a practitioner use the regression equations but rather to achieve the best estimate of the standard error of the regression equation for comparative purposes.

The second option would be to use only one data point from each aircraft at a specific quantity, such as 100. This option would alleviate the bias found in the independent variables. However, this approach would result in a regression model with only four data points. Therefore, the number of independent variables would be limited to two because of the degrees of freedom in the regression model. The primary benefit of this approach is that the regression equation would be useful to a practitioner. However, there are some significant problems with this approach. Preliminary models using this technique found that the B-1 was a highly influential data point. Leaving this data point in the model may invalidate the results of the regression, including the p-values associated with the independent variables, the assumptions, and the regression coefficients.[38]

To achieve the objectives of a comparison of the micro and macro approaches to cost estimation, the validity of the errors

A/C	Lot #	Lot Qty	Avg Lot Cost	Wingspan	Wing Area (Square Feet)	Length	Height	Tread	Wheelbase
F-16	1	8	23.66	32.8	300	49.4	16.4	7.8	13.1
F-16	2	55	7.84	32.8	300	49.4	16.4	7.8	13.1
F-16	3	105	9.02	32.8	300	49.4	16.4	7.8	13.1
F-16	4	145	713	32.8	300	49.4	16.4	7.8	13.1
F-16	5	75	6.74	32.8	300	49.4	16.4	7.8	13.1
F-16	6	348	7.44	32.8	300	49.4	16.4	7.8	13.1
F-16	7	175	5.28	32.8	300	49.4	16.4	7.8	13.1
F-16	8	180	5.23	32.8	300	49.4	16.4	7.8	13.1
F-16	9	160	5.11	32.8	300	49.4	16.4	7.8	13.1
F-16	10	120	6.68	32.8	300	49.4	16.4	7.8	13.1
F-16	11	144	5.85	32.8	300	49.4	16.4	7.8	13.1
F-16	12	150	6.26	32.8	300	49.4	16.4	7.8	13.1

Table 2. Portion of F-16 Independent Variables Data

Fighter Category	Mean	Standard Deviation
Basic Airframe	0	.334
Other Air Vehicle	0	.356
Flyaway	0	.313
Intertheater Airlift Category		
Basic Airframe	0	.225
Other Air Vehicle	0	.272
Flyaway	0	.199

Table 3. Residual Distribution Parameters from Regression Equations

resulting from the regression models must be of the highest quality. Therefore, the first solution of using qualitative variables is the preferred solution to this problem. This method provides a mathematical model that best estimates the errors.

Results

The residual term is the item of interest to perform the macro versus micro comparison. Table 3 shows the resultant residuals from each of the regression equations. The Kolmogorov-Smirnov Test returned a p-value of >0.15 for the residuals of each equation, validating their normal distributions. These distributions are critical as inputs to the bootstrap technique that will be used to perform the macro versus micro comparison.

Generation of the regression equations leads to the next step in the analysis: fixed X, residual resampling. Beginning with the fighter category, a comparison of the flyaway and basic airframe component is considered. Starting with the flyaway regression equation, Crystal Ball performs the bootstrap technique. Next, the bootstrap technique is replicated for the basic airframe category. The standard error of the resulting 200 bootstrap samples from the flyaway and basic airframe categories are then differenced. The differenced data distribution allows for a comparison of the macro versus micro techniques. The mean of the distribution is –0.0208 with a 95-percent confidence interval of –0.0195 to –0.0222

The bootstrap technique is applied in an identical manner for the other air vehicle data as it was for the flyaway and basic airframe components. The resulting 200 standard deviation samples from the flyaway data and other air vehicle were differenced. The mean of the distribution is –0.0445. The 95-percent confidence interval is –0.0429 to –0.046.

The same procedure is applied to the intertheater airlift category. First, the basic airframe versus flyaway is considered. The mean of the distribution is –0.027. The 95-percent confidence interval is –0.026 to –0.028. Next comes the other air vehicle versus flyaway. The mean of the distribution is -0.0732. The 95-percent confidence interval is -0.0722 to -0.0742. The four resulting distributions are the basis for the conclusions.

Importance of Findings

This research is important for several reasons. First, the cost-analysis career field is shrinking. As demonstrated by the ASC example, there has been a dramatic reduction in cost authorizations over the last decade. Cost analysts, therefore, are becoming a scarce resource. When confronted with the challenge of developing a cost estimate, program managers need to know how to optimize this resource. By understanding the advantages and disadvantages from an estimation error risk perspective of estimating at differing WBS levels, optimal allocation of cost analysis resources can be achieved. Second, to achieve cycle-time reduction goals, the time to develop a cost estimate is compressed. As a result, cost estimates need to be developed more quickly, while still maintaining a satisfactory level of fidelity. This lends to the conclusion that using the time-consuming grassroots techniques will not be possible. Rather, estimation will occur at the highest WBS level possible, while still achieving a satisfactory level of confidence in the estimate. This research provided the analysis necessary to understand the tradeoffs implicit in estimating at the differing WBS levels. When making resource allocation decisions under a constrained environment, program managers then can apply this information.

Limitations

There are several limitations to this research. First, only recurring data are considered in the analysis. The estimation error risk of nonrecurring data is not considered. Second, the weapon systems analyzed are limited to aircraft systems, specifically fighters and intertheater airlift aircraft. To extrapolate the results of the analysis to data outside aircraft weapon systems is inappropriate. Likewise, to extrapolate the results to other categories of aircraft, such as bombers, is inappropriate. Third, the WBS level comparison is limited to level one versus level two. Conclusions about lower WBS levels are not considered. Finally, the WBS level two breakdown is not a pure MIL-HDBK-881 breakout.

Conclusions can be drawn only about a level one versus level two comparison with regard to the breakout of WBS level two into the basic airframe and other air vehicle components.

Discussion of Results

Starting with the fighter category, there is a statistically significant difference between estimating at the flyaway cost level versus the basic airframe and other air vehicle level. This is confirmed by the 95-percent confidence intervals around the mean of the differenced distribution, which do not contain zero for either model comparison. For the flyaway cost versus basic airframe model, the mean of the distribution is -0.0208 with a 95-percent confidence interval of (-0.0195, -0.0222). For the flyaway cost versus other air vehicle model, the mean is -0.0445 with a 95-percent confidence interval of (-0.0429, -0.046). Several additional conclusions can be drawn from this. First, there is clearly more error risk in the estimation of the other air vehicle model than the basic airframe model. This indicates that program managers should allocate more time and resources to the development of the other air vehicle estimate than to the basic airframe estimate if the estimate is being developed at WBS level two. The second conclusion was one not anticipated when the research began. The differenced distributions are calculated by subtracting the WBS level two data from the WBS level one data. As shown above, the mean and resultant 95-percent confidence intervals of both these distributions are negative. This leads to the conclusion that estimating at WBS level one has less error risk than estimating at WBS level two. There are several possible reasons for this. It could be that when estimating at the lower levels, the details of the estimate cloud the bigger picture, leading to inaccurate or inappropriate model inputs from experts. In other words, it may be harder to break down an estimate to the individual components without adding additional error. Another possible explanation is that the positive and negative error risks in the individual components cancel each other out as they accumulate at higher levels. Although this research cannot conclude with any certainty why the WBS level one error risk is less than the WBS level two error risk, the above possibilities are reasonable explanations.

The results from the intertheater airlift category are similar. There is a statistically significant difference in the estimating error between estimating at WBS level one and level two. The mean of the distribution for the flyaway cost versus basic airframe is -0.027 with a 95-percent confidence interval of (-0.026, -0.028). The mean of the distribution for the flyaway cost versus other air vehicle is -0.0732 with a 95-percent confidence interval of (-0.0722, -0.0742). As neither confidence interval encompasses zero, it is appropriate to say that there is a statistical difference between the two. Like the fighter category conclusions, there is more estimation error risk in the other air vehicle model than the basic airframe. This indicates that program managers should allocate more resources to the other air vehicle portion of their estimates. Also, as with the fighter category results, it is determined that there is more estimation error risk when estimating at WBS level two than at WBS level one. The same rationale explained for the fighter category is applicable to the intertheater airlift results.

Category	Fighter	Intertheater Airlift
Flyaway vs Basic Airframe	$44,137.60	$68,682.90
Flyaway vs Other Air Vehicle	$124,097.40	$157,584.96

Table 4. Practical Significance of WBS Estimation Levels

Practical Versus Statistical Significance

Despite the conclusions above regarding the statistically significant differences between estimating at the varying WBS levels, there is a practical application perspective to consider. The estimation errors from the models are extremely small considering the multimillion dollar costs of aircraft weapon systems. Quantitatively, the dollar amount differences are shown in Table 4.

These dollar amounts are so small that, although there is a statistically significant difference, there is little difference from a practical standpoint. In most cases, the error risk simply is not large enough for program managers to be concerned when allocating resources. As a result, it is anticipated that program managers will allocate resources based on other considerations, such as time constraints or desired level of visibility into the estimate.

Future Research

There are several areas related to the methodology of this research that can be explored in future research. First, an examination of the nonrecurring estimating error between differing WBS levels could be examined. This is a natural extension of the recurring estimation error analyzed in this research. Second, a comparison of the estimation error difference at WBS level two versus WBS level three could be explored. Although other variations of WBS level comparisons could be made, a level two versus level three would be most useful to the practitioner. Third, this methodology could be applied to different weapon systems than aircraft. These future research areas would be a natural bridge to the limitations described above.

Notes

1. George Cho, Hans Jerrel, and William Landley, *Program Management 2000: Know the Way—How Knowledge Management Can Improve DoD Acquisitions,* Ft Belvoir, Virginia: Defense Systems Management College Report of the Military Research Fellows, Jan 00, 1-1.
2. Kathy Ruffner, "Growing Cost Estimators," presentation to SAF/FM, Wright-Patterson AFB, Ohio, 9 Jan 02.
3. Conrad S. Ciccotello, Steve G. Green, and Martin J. Hornyak, "Rethinking Twenty-First Century Acquisition: Emerging Trends for Efficiency Ends," *Acquisition Review Quarterly*, Winter 1997, 28.
4. AFSC Cost-Estimating Handbook Series, Reading, Massachusetss, prepared for the Air Force Systems Command, 1986 [Online] Available: https://fmfweb.wpafb.af.mil/fmweb/fmc/estimating handbooks/estimatinghandbooks.htm, 217.
5. Department of Defense, *Department of Defense Handbook: Work Breakdown Structure,* MIL-HDBK-88, Washington, Part 4, 1996.
6. Quentin W. Flemming and Joel M. Koppelman, *Earned Value Project Management, 2d Edition,* Newton Square, Pennsylvania: Project Management Institute, 2000, 54.

(continued on page 47)

Current Logistics Research

AFMC/XPS Logistics Analysis

Richard A. Moore

The history of war proves that nine out of ten times an army has been destroyed because its supply lines have been cut off ....

—General Douglas MacArthur, USA

What is an XPS, and why does it do logistics analysis? In the beloved world of alphabet soup that identifies organizations in the Air Force, XPS is the Management Sciences Division of the Directorate of Plans and Programs (XP) in Headquarters Air Force Materiel Command (AFMC). Now that you really are confused, you should know that management sciences is also known as operations research, and both simply refer to the professional discipline of using analysis to inform decisionmakers.

That tells you what we are but does not tell you why we do logistics analysis. After all, shouldn't an office that is part of an organization doing plans and programs be focused on strategic plans, the program objective memorandum, or manpower? That's typically the business of an XP organization in the Air Force, but because an XP organization also has a corporate perspective and *honest broker* role, XPS is able to help decisionmakers in all AFMC organizations. We focus much of our efforts on logistics because we, like MacArthur, think it is important. And judging by the billions of dollars the Air Force spends annually just buying and repairing spare parts, our senior leaders agree.

This article highlights our work in 2003 to improve the effectiveness and efficiency of logistics in the Air Force. Following is a summary of three of our significant spares management studies and a list of other contributions made toward improving Air Force logistics. Details and points of contact for topics mentioned are available in our 2003 annual report, which can be found at https://www.afmc-mil.wpafb.af.mil/HQ-AFMC/XP/xps/xps_annrep.htm. You may request a printed or electronic copy from Samantha Hetrick (937-257-3887 or samantha.hetrick@wpafb.af.mil).

Customer-Oriented Leveling Technique—Exporting a Capability from the Depots to the Flight Line

In late 2001, we worked with a team from the AFMC Logistics Directorate and air logistics centers (ALC) to develop the customer-oriented leveling technique (COLT) to allocate optimally and execute the depots' $800M annual General Support Division (GSD) budget. The primary supplier of parts bought with GSD funds is the Defense Logistics Agency (DLA). COLT uses sophisticated algorithms to determine the stock levels that will provide the lowest possible expected back orders for a given level of spares funding. By reducing back orders, COLT also reduces the time that people who repair aircraft and aircraft components wait for spare parts (that is, customer wait time [CWT]).

COLT is a departure from the practice of setting stock levels for all DLA-managed parts in exactly the same manner. It incorporates item-specific factors, based on the expected percentage of time DLA will have the parts in stock that the depot requests, as well as the length of time the depot has to wait for parts not immediately issued by DLA. By looking at the total expected pipeline time for each item, COLT is able to tailor stock levels to get the most efficient use of the GSD dollars.

As of December 2003, implementation of COLT has resulted in a 60-percent reduction in the customer wait time for depot maintenance with no increase in cost. Likewise, the quantity of repairs awaiting parts for DLA parts has reduced the same amount. Because of these accomplishments, the COLT Team won the 2003 General Yates Team Excellence Award for AFMC and was nominated for the Chief of Staff Team Excellence Award for the Air Force.

With the tremendous success realized by implementing COLT at the depots, we turned our attention to implementing COLT at the base level where we could have a more direct and significant impact on readiness. Setting base stock levels for DLA parts is not a responsibility of AFMC, so we teamed with the Air Force Logistics Management Agency (AFLMA) and the Air Force Materiel Management and Policy Division to develop any changes in business rules required for the base environment.

COLT was first tested at Seymour Johnson AFB, North Carolina, at Air Combat Command (ACC) in November 2002 and at Laughlin AFB, Texas, for Air Education and Training Command in March 2003. We identified a problem with the funding parameters provided to COLT, and it was agreed that testing would be postponed until further analysis could be completed. We worked with a team, with representatives from all the major commands (MAJCOM), to identify the issues and suggested changes to be implemented before continuing testing. Some of these base-unique changes are summarized in Table 1.

We made these changes to the COLT algorithm and compared the expected performance of COLT to the performance from the computations in the Standard Base Supply System (SBSS). Table 2 shows the expected back orders that are likely to be seen for two different bases.

These improvements are of the same magnitude projected at the beginning of the COLT implementation at the depots and which were later realized. Both ACC and Air Mobility Command agreed to test COLT at their respective bases, Seymour Johnson and Travis AFB, California. The Seymour Johnson test began in October 2003, and the Travis test began in December 2003. We will be working closely with both commands to monitor these

tests throughout 2004. If the results are as predicted, we would like to apply COLT to at least one base in each MAJCOM in fiscal year (FY) 2005 and implement COLT for an entire MAJCOM at the same time. This broad proof of concept would precede Air Force-wide implementation in FY06. Though there is still much to learn and do, we are very optimistic about the benefits this improved logistics process will bring to the warfighter.

Demands for Parts During Operation Iraqi Freedom—How Well Did We Forecast?

How well does the Air Force predict the demand for aircraft spare parts that will be ordered in wartime? It is impossible to predict the demands accurately for a given item at a specific location—but what about the overall trends? Are our demand forecasts high, low, or in the ballpark? Are there significant outliers? This study assessed the expected wartime demands against the items actually demanded during Iraqi Freedom.

The data used in the evaluation were obtained from several sources. A US Central Command Air Forces report identified the weapon systems used during Iraqi Freedom. We were not able to determine the exact readiness spares packages (RSP) used in Iraqi Freedom, so we selected RSPs that were designed to support the number and type of aircraft involved. RSP data were obtained from the 2002 contingency kits in the D087G data system (Weapon System Management Information System, Requirements and Execution Availability Logistics Module). Demand data from 19 March through 18 April 2003 were obtained from the SBSS. The demands specify the quantity of items ordered by bases. Iraqi Freedom demands (immediate issues, kit issues, and back orders) were identified by project code 9GJ. We were advised that there was confusion regarding which project code to use during the first 2 weeks of the operation, so we elected to count all base demands as Iraqi Freedom demands if at least 25 percent of a base's total demands were coded 9GJ. Expected demands for 30 days of war, calculated from RSP data, were compared against Iraqi Freedom demands recorded in the SBSS for the first month of the war.

This study focused on all items contained in RSPs except not optimized items, because valid demand rate predictions are not available for these type items. For items considered, we found more than 1,900 unique stock-numbered items were ordered between 19 March and 18 April 2003. The total quantity ordered across those parts was 5,544. We discovered many items were overpredicted or underpredicted significantly during the operation, with most being overpredicted. Figure 1 shows that only 20 percent of the expected demands actually occurred. Further, 2,248 demands were unexpected based on RSP demand projections.

The quantity of unexpected demands did not seem unusual, since it is impossible to predict component failures accurately—and the vast majority of underpredicted items had small differences between expected and actual demands. On the other hand, the large number of overpredicted demands was surprising. Further analysis of the overpredictions showed that the majority of parts were not overpredicted by very much, although there were some parts with very large differences.

Modeling Issues	COLT for Bases	COLT for Depots
Objective function	Meet performance target	Meet financial target
Order quantities	Account for EOQ	Account for daily ordering (no EOQ)
Part essentiality	Always stock MICAP-causing parts	Not considered

Table 1. Base-Unique Changes

Base	EBO—SBSS	EBO—COLT	% Change
Seymour Johnson	32,810	11,181	-65.9
Travis	9,036	2,859	-68.4

Table 2. Expected Back Orders

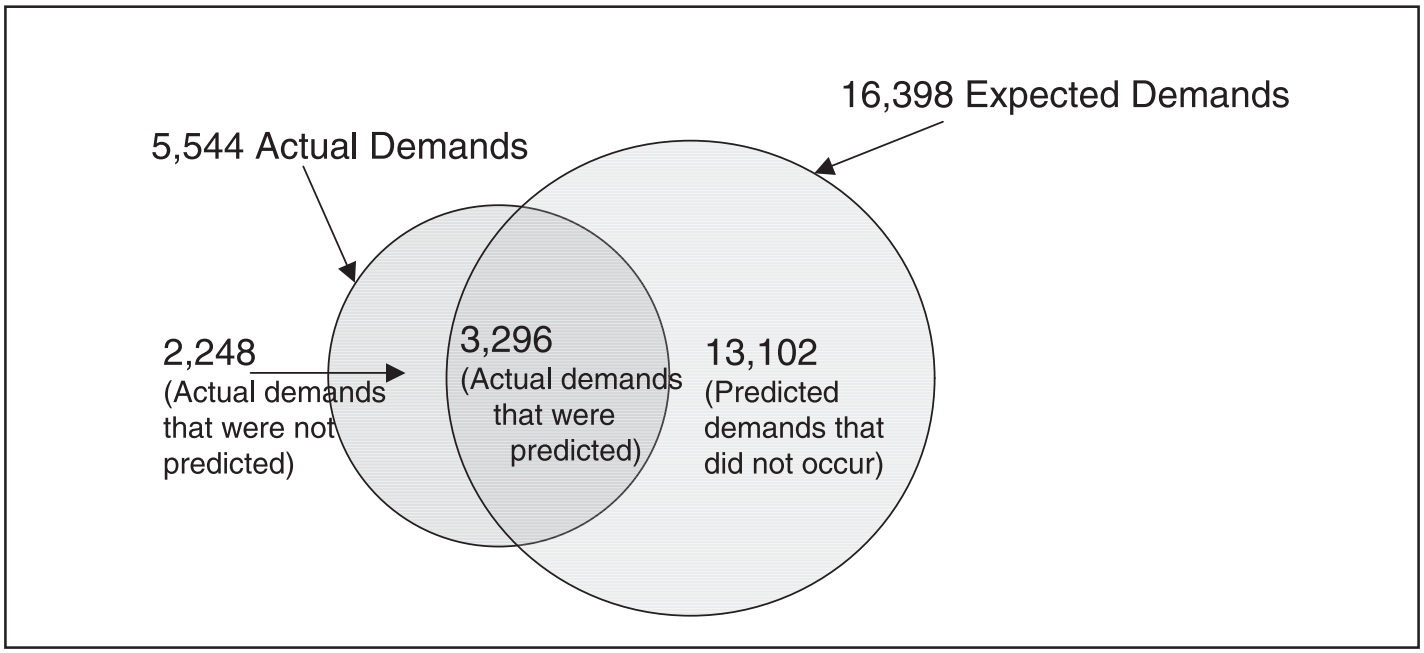

Figure 1. Actual Expected Demands

While the bulk of RSP-computed items was overpredicted, there were underpredicted items as well, as indicated in Figure 2. Most of the items were underpredicted by ten or fewer.

These data can help with evaluation of the processes used to predict wartime demands to see if improvements can be made. Again, demand predictions will never be precise, especially in a wartime environment, but it may be possible to reduce the magnitude of the discrepancies. A more detailed report and demand data file are available upon request.

Supply Chain Metrics—Relating Supply Measures to Warfighter Capabilities

Metrics drive behavior. It is understood that measuring the performance of a process and reporting the results to senior leaders can drive improvements to the process. In the case of Air Force supply, there are a host of measures that historically have been used to report the health of the supply system. Most people acknowledge that the ultimate supply measure is total not mission capable due to supply (TNMCS), as it measures the amount of time a weapon system is grounded because of a lack of spare parts. But TNMCS is a measure of supply performance at the weapon system level. It does not measure the supply performance of the individual parts that can ground a weapon system. AFMC managers need supply measures related to the individual parts because different organizations and processes manage the parts. So we conducted a study to identify the supply measures most closely correlated to TNMCS.

We used the Supply Chain Operational Performance Evaluator (SCOPE) simulation model to quantify the relationship between TNMCS and the most popular supply measures.

- Customer wait time
- Logistics response time (LRT)
- Issue effectiveness (IE)
- Mission-capability (MICAP) hours

We did not directly consider two other supply measures, depot back orders and stockage effectiveness, because they are related closely to measures already considered (logistics response time and issue effectiveness, respectively). The SCOPE simulation modeled 16 different scenarios that we deemed might influence the relationships.

- Number of aircraft (large and small number of primary authorized aircraft [PAA])
- Intermediate maintenance capability (yes or no)
- Depot-to-base part transportation time (large or small order and ship time [OST])
- Complexity of weapon system (many or few parts)

Supply measures and TNMCS data were collected from each simulation for 1,000 days and for 25 different iterations. We computed correlation coefficients between each of the supply measures and TNMCS to quantify the relationship and then identified which measure was correlated most closely to TNMCS for each scenario. The results are summarized in Figure 3.

These results clearly show that MICAP hours and customer wait time are the supply measures most closely related to the ultimate supply measure, TNMCS. The AFMC Logistics Directorate used this conclusion to change the metrics used to monitor the performance of supply chain managers. Starting in FY04, the metrics will be MICAP hours and customer wait time.

Other Contributions

We helped improve Air Force supply lines in a number of additional ways in 2003. Following is a brief summary of those efforts, grouped into four functional areas.

Performance Measurement

- Developed a process to identify the parts with the greatest underforecasted demands and overforecasted demands in D200A (Secondary Item Requirements System) to focus ALC attention on improving the forecasts.
- Demonstrated for several senior leaders why supply metrics can and should differ across ALCs and supply chain managers.
- Showed the impact pipeline times have on the performance of the supply system.
- Continued development of the Wartime Supply Chain Evaluation model to forecast warfighter readiness in preparation for contingencies.
- Evaluated the supply support provided to foreign countries via our LRT analysis tool.
- Applied a new process to value Air Force spare part inventory at a moving average cost instead of the latest acquisition cost for serviceable inventory and carcass cost for unserviceable inventory.
- Showed that parts procured using a strategic sourcing concept have experienced reductions in acquisition lead time, increases in on-time deliveries, and price stabilization.

Computing Spares Requirements

- Quantified the readiness improvements the Air Force can expect from the DLA weapon system readiness improvement initiative.
- Developed a process to determine the optimal mix of AFMC GSD and Materiel Support Division funding to maximize warfighter support.
- Identified improvements to the D200A spares requirements computation to recognize the base economic order quantity for consumable parts.
- Used COLT to determine the GSD funding allocation across ALCs for FY04.
- Continued building evaluation tools for both the Air Force and DLA weapon system support programs.

Setting Stock Levels

- Demonstrated that D035E (readiness-based leveling [RBL]) can set stock levels effectively and improve support for Air Force-managed consumable parts
- Provided quarterly reports to the AFMC Logistics Directorate, showing the expected financial and readiness impacts of the quarterly RBL computations.
- Worked with the Logistics Management Institute to develop a concept for linking Air Force readiness-based sparing math models into the Advanced Planning and Scheduling (APS) demonstration at Oklahoma City ALC.
- Evaluated the forecasting accuracy of 30 different techniques from a commercial forecasting package and D200A and

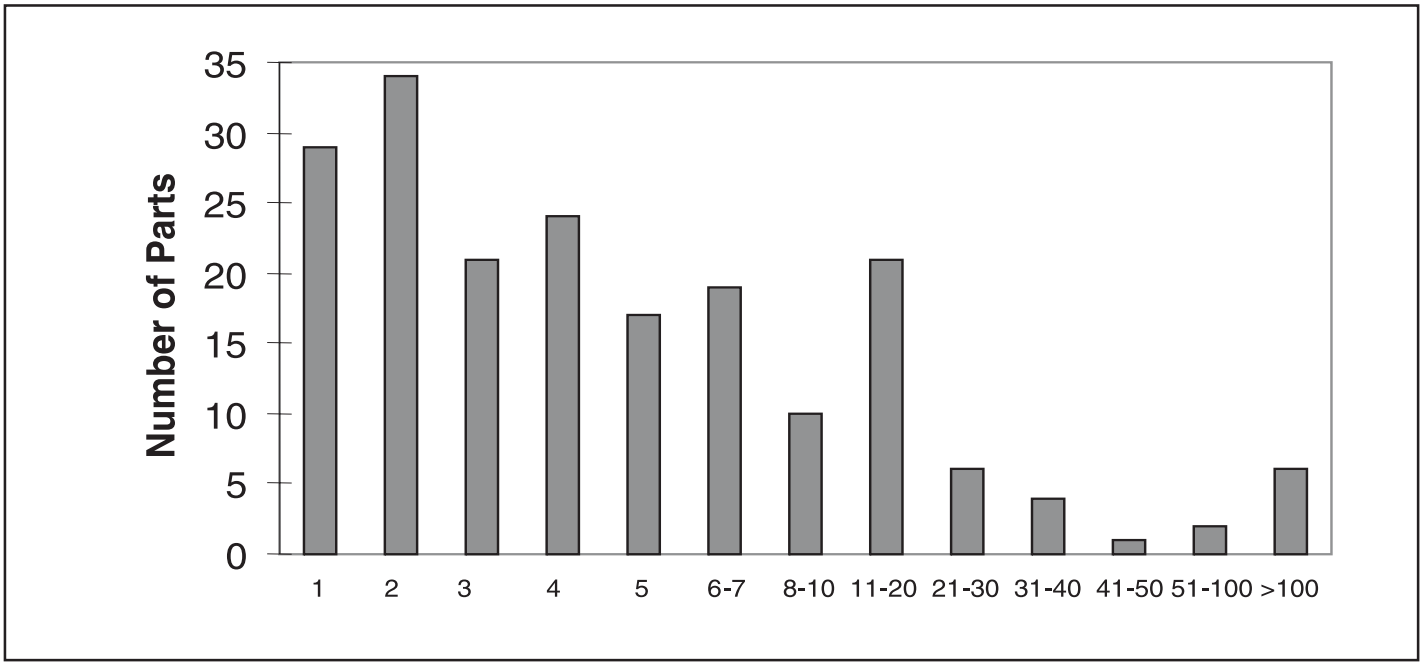

Figure 2. Magnitude of Underprediction

Metric	A	B	C	D	E	F	G	H	I	J	K	L	M	N	O	P
LRT																
CWT	X		X		X		X					X	X		X	
IE																
MICAP Hrs		X		X		X		X	X	X	X			X		X

Most closely correlated measure indicated by X

ID	Scenario
A	Big PAA, Maint, Sm OST, Few Items
B	Big PAA, Maint, Sm OST, Many Items
C	Big PAA, Maint, Lg OST, Few Items
D	Big PAA, Maint, Lg OST, Many Items
E	Big PAA, No Maint, Sm OST, Few items
F	Big PAA, No Maint, Sm OST, Many Items
G	Big PAA, No Maint, Lg OST, Few Items
H	Big PAA, No Maint, Lg OST, Many items

ID	Scenario
I	Sm PAA, Maint, Sm OST, Few Items
J	Sm PAA, Maint, Sm OST, Many Items
K	Sm PAA, Maint, Lg OST, Few Items
L	Sm PAA, Maint, Lg OST, Many Items
M	Sm PAA, No Maint, Sm OST, Few items
N	Sm PAA, No Maint, Sm OST, Many Items
O	Sm PAA, No Maint, Lg OST, Few Items
P	Sm PAA, No Maint, Lg OST, Many items

Figure 3. MICAP Hours and CWT Most Closely Correlated to TNMCS

highlighted the top 10 for inclusion in the APS demonstration at Oklahoma City ALC.

- Validated software changes to the D200A logic used to compute safety stock levels.
- Assisted with the calculation of RSP requirements for the joint strike fighter.

Executing Spares Requirements

- Worked with AFLMA to show that the process for reporting serviceable intransit asset data is broken—at least 36 percent of the reported intransits are overstated.
- Updated the Execution and Prioritization of Repair Support System (EXPRESS) math model to accommodate longer repair execution horizons.
- Highlighted a shortcoming in the EXPRESS prioritization of current maintenance back orders and obtained corporate Air Force approval to implement an improvement.
- Participated as a member of the AFMC Purchasing and Supply Chain Management Integrated Product Team to develop seamless and transparent purchasing and supply chain management processes.
- Evaluated a proposed closed-loop planning process and associated analytical model developed by RAND and qualified its role in helping AFMC support the warfighter through improved depot resource planning.

Mr Moore is Chief, Analytic Applications Function, Management Sciences Division, Headquarters Air Force Materiel Command, Wright-Patterson AFB, Ohio.

EXPLORING THE HEART OF LOGISTICS

eLog21—Purchasing and Supply Chain Management

Wing Commander Mark Leatham, RAAF

Sustainment Transformation

The Air Force logistics community is facing ever-increasing challenges to providing faster and more reliable combat support to the warfighter in the next-generation battlefield. To overcome these challenges, Air Force logistics fundamentally must transform warfighter sustainment operations by leveraging information and process improvements across the Air Force enterprise. To achieve significant operational efficiencies and drive down support costs, the Air Force has launched the logistics transformation initiative eLog21 (Expeditionary Logistics for the 21st Century), and the logistics community, in support of eLog21, is transforming through its initiatives: the Purchasing and Supply Chain Management (PSCM) Transformation and Depot Maintenance Transformation (DMT).

To most effectively support the warfighter, the Air Force eLog21 effort will transform key areas of logistics operations by adopting an enterprise-wide, end-to-end focus on customer support to deliver best-in-class performance. The PSCM transformation will improve the availability of parts to the warfighter, reduce the cost to purchase parts, and improve product quality and delivery. This will be accomplished by improving and integrating the logistics communities purchasing and supply processes into a single, seamless process that spans the Air Force supply system. The DMT effort will transform depot maintenance by reengineering the business processes to provide affordable, on-time support to our customers. All efforts will require radical change in how we plan, source, execute, and deliver support to the warfighter.

The PSCM and DMT initiatives, collaboratively known as sustainment transformation, will position the Air Force to meet the changing demands of tactical warfare now and into the foreseeable future. Senior Air Force leadership has committed, in writing, to support the transformation of logistics functions and operations. To focus and motivate the logistics community to achieve the envisioned sustainment transformation, logistics commanders have challenged senior leadership to aim for the following stretch performance goals:

- 20-percent increase in weapon system availability (PSCM and DMT).
- 20-percent decrease in support costs (PSCM).
- Reduce Air Force Materiel Command (AFMC) depot maintenance costs by 10 percent each year (DMT).
- 50-percent decrease in cycle time (PSCM).
- 100-percent on-time aircraft delivery (DMT).
- For exchangeables, meet customer requirements within planned turnaround time.
- For aircraft due-date performance, deliver 90 percent of aircraft per original MRRB plan, with the remaining 10 percent delivered at 100 percent per initial Aircraft and Missile Maintenance Production Report.
- Superior quality (DMT).
- Reduce customer-reported defects by 25 percent each year (external).
- Reduce workmanship defects by 25 percent each year (internal).

Purchasing and Supply Chain Management

PSCM has been tasked to improve and integrate purchasing and supply processes. PSCM will transform how we plan, contract, work with our suppliers and customers, manage assets, and respond to the warfighter's materiel needs in a more agile manner.

The PSCM team has developed processes; now they are defining the technology, organizational structure, and skills to enable the processes. PSCM is an *enterprise wide* effort, which means it is a collaboration of the three air logistics centers (ALC), Headquarters AFMC, and the regional supply squadrons and covers the Materiel Support Division, equipment items, and associated engineering services.

Over the last 9 months, the PSCM Integrated Process Team has made steady progress in analyzing the current processes, identifying improvement opportunities, designing new Air Force-wide business processes, and launching PathFinder commodity councils. Using the Supply Chain Operations Reference (SCOR) model, the PSCM team is identifying process changes throughout the purchasing and supply chain management cycle, beginning at the initial customer request for a part and ending when the customer uses that part. The SCOR model was developed to describe business activities associated

with all phases of satisfying customer demands. The PSCM model uses the five primary management processes of Plan, Source, Make, Deliver, and Return and then augments these basic SCOR building blocks with Process Enablement (information technology [IT], HR, Finance, and Knowledge Management), Strategic Planning, Customer Management, Repair, and Engineering Configuration Management. Thus, the PSCM model outlines the high-level processes required to manage the entire To-Be Air Force supply chain.

The team has mapped As-Is processes in the areas of demand planning, customer relationship management, supplier relationship management, and strategic planning. The team has conducted targeted root-cause analysis, defined and quantified high-impact issues across current processes, and identified numerous opportunities for process improvement.

To address these and other issues, the PSCM Team developed a To-Be model for future purchasing and supply processes. To reduce overall process time from forecasting to delivering parts to customers, the team is concentrating on smarter and more aligned ways of performing work. As they design new processes, the team is making use of leading practices from the private sector as they best apply to the Air Force. For the proposed To-Be processes, the team has identified the high-level functional requirements for near-term and long-term IT support. These requirements are the core of an operational architecture that is being integrated with the Air Force LogEA architecture.

To communicate enterprise-wide goals, monitor progress, and manage performance, the PSCM team has developed a *balanced scorecard* with clear, quantifiable performance metrics and targets that balance customer, financial, process, and people requirements.

The team will continue to conduct gap analyses to identify discrepancies of skills, IT, and processes between As-Is and To-Be environments. These gaps will be key inputs to our roadmap of initiatives that will be derived over the next months. The team will initiate job and organizational design to enable the new processes. Finally, the PSCM team will work collaboratively with the LogEA team to develop the overall Air Force transformation business case.

By April 2004, the PSCM team will deliver an enterprise-wide implementation plan that addresses redesigned processes, new job roles, training for these new jobs, a business case for enabling technology, and a PSCM organizational construct. As the transformation advances toward that milestone, the PSCM team is launching several wide-scale communications campaigns to help employees learn more about PSCM and get involved in the transformation.

Depot Maintenance Transformation

Beginning in April 2003 and through the summer of 2003, the DMT team—composed of maintenance, financial, and supply managers from Headquarters AFMC, the three air logistics centers, and aerospace maintenance and regeneration centers—performed Business Process Reengineering by taking a lean approach to integrate process improvements on the shop floor with production support processes. The team considered the challenges facing the Air Force and provided direction for future depot maintenance operations. Their strategy implements continuous improvement; the flow of standard work in cells to include no stops, piles, or backups; a pull, on-demand system; the elimination of waste in the value stream; a tailored logistics strategy; and a single, integrated system supporting the process. Innovative depot maintenance processes ensure a robust, modern, and reliable capability to support the warfighter.

In October 2003, a Red Team reviewed the DMT transformation results. Air Force, Navy, and other stakeholder organizations, as well as private industry leaders, reviewed the DMT future state and action plan and assessed the effectiveness of new DMT processes. Primary recommendations from the review included better defining and deploying an overarching governance model that supports and guides the DMT implementation and decisionmaking process. The second major recommendation was to develop robust DMT performance measurement and change management processes. These processes will play a critical role in the success of the DMT initiative and provide measurable and controllable tools that ensure DMT meets its stated goals and objectives.

In November 2003, the depots will implement four depot maintenance trailblazers. The trailblazers are four F-15 weaponsystem product lines at the air logistics centers that will be used to define and prove the reengineered depot maintenance processes. The four trailblazers include the following product lines:

- F-15 program depot maintenance line at Warner Robins ALC
- F100 engine at Oklahoma City ALC
- F-15 landing gear at Ogden ALC
- F-15 avionics shop at Warner Robins ALC

The trailblazers will define and demonstrate improved ways of providing production support to a lean repair line. Trailblazer teams will take the high-level business processes defined by the DMT team and, through a series of lean events and actual implementation, detail the lean solution for the command. The four efforts will share ideas and coordinate to define the DM business processes at the right level to export the best practices to the rest of the DM community.

It will be necessary for multiple shops in multiple locations to communicate and work together to ensure transition to lean production for the F-15. Metrics must be designed to assess the changes accurately and determine their impact on the trailblazer lines. Weapon system availability and war readiness engines will be assessed at the beginning, during, and after the trailblazer to evaluate the effort's impact.

Each trailblazer shop will go through a series of steps to stand up and implement the new process. First, each shop will be assessed to determine where it is at the beginning of the process. This includes documenting the current configuration and capabilities. In addition, all shop employees will be educated on the initiative, reasons for transformation, and why they play an integral role in the future success of the command. Standard education and training will be developed by the DMT Team as part of the overall change management. Following education and training of the trailblazer personnel, each shop will conduct a series of lean events to lean the shop floor and production support, develop planning and scheduling processes, and develop a tailored logistics support plan for the shop.

Summary

Sustainment transformation represents a revolutionary change to the way logistics does business for the Air Force. For this transformation to be successful, the two teams recognize that senior logistics leaders, managers, and the workforce must embrace the new sustainment approaches and claim ownership of the transformation. Indeed, the efforts of all these stakeholders are essential to fully engage and gain the support of customers and suppliers and take full advantage of the process improvements brought about by sustainment transformation.

To this end, the PSCM and DMT Teams are working together to develop coordinated change management plans. The teams have launched awareness and understanding campaigns to communicate to their respective logistics communities that a transformation is coming and that this change is good for the Air Force; its employees; vendors; and especially, the warfighter. In addition, the teams are enlisting sponsors and mobilizing change agents to support the transformation. By working collaboratively across the enterprise versus operating as individual transformation efforts, the PSCM and DMT Teams are increasing their effectiveness and maximizing cost-saving opportunities, which will present a positive impact to the warfighter.

As the teams chart the future, they are inspired by the eLog21 vision that AFMC will be the sustainment supplier and maintainer of choice for worldwide weapon systems, parts, and equipment support. New processes will require new job roles, skills, ways of working and thinking, and tools. They also will require changes to policies, authorities, and organizational constructs. Although these changes will not be easy or occur overnight, Air Force leaders are committed to implementing sustainment transformation and seeing it through to ultimate success.

You Are Invited to Learn More!

Do you want to learn more about PSCM or DMT? Please watch for upcoming fact sheets and newsletters, attend briefings, and browse our growing Web sites: PSCM at https://www.ripit.wpafb.af.mil/PSCM/PSCM.html or DMT at https://www.afmc-mil.wpafb.af.mil/HQ-AFMC/LG/lgp/lgp_/transform.htm

Would you like to get involved? Please contact the PSCM Team at PSCM.Info@wpafb.af.mil or the DMT point of contact, Sandra Wimberly at sandra.wimberly@wpafb.af.mil. We encourage you to share your ideas, get involved, and remain positive in learning new ways to do our business.

Points of Contact

- PSCM Co-Project Manager: Marie Tinka, Deputy Chief, Supply Management
- PSCM Co-Project Manager: Scott Correll, Chief, Logistics Contracting Division
- DMT Project Manager: Sue Dryden, Deputy Chief, Depot Maintenance Division
- ILI (eLog21 Campaign): Colonel Paul Dunbar, Deputy Director, ILI

Wing Commander Leatham is currently on exchange with the Air Force and is serving on the Air Staff as Deputy Division Chief, Purchasing and Supply Chain Management, Directorate of Innovation and Transformation. He is also a member of the AFMC PSCM Integrated Project Team and author of the Air Force Installations Purchasing and Supply Chain Management Concept of Operations.

"Injecting Commercial and Innovative Practices into Operational Contracting" continued from page 20)

moving in the direction it is. Learning what the other services, as well as the Air Force, are doing to increase commercial and innovative practices at the operational level is important to understanding where they currently stand. Being aware of the current guides and assistance available today is paramount.

Interjecting commercial and innovative practices into Air Force operational contracting is about ensuring contracting professionals are given the opportunity to grow, feel empowered, embrace change, and always be able to believe there is somewhere to go to find an answer to a question. Operational contracting commanders and chiefs must make it happen.

Notes

1. J. S. Gansler, Under Secretary of Defense (Acquisition and Technology), memorandum to Secretaries of the Military Departments; Director, Defense Contract Management Agency; and Director, Defense Logistics Agency, subject: Commercial Acquisitions Memo, 5 Jan 01.
2. Donald Rumsfeld, Secretary of Defense, memorandum to Secretaries of the Military Departments, et al, subject: Legislative Priorities for Fiscal Year 2004, 17 Sep 02.
3. "Best Practice: Acquisition Reform," Anniston Army Depot—Anniston, Alabama, 29 Jun 01 [Online] Available: bmpcoe.org/bestpractices/internal/anad/anad_7.html.
4. "Commercial Practices," Department of the Navy Acquisition Reform topic.cfm?topic_id=37.
5. Jerry A. Walz, "A Lawyer's View of FASA—An Overview," Contract Law Division, Office of the Assistant General Counsel for Finance and Litigation, 7 Nov 94.
6. Catherine A. Shea, "A Lawyer's View of FARA," Contract Law Division, Office of the Assistant General Counsel for Finance and Litigation, 29 Mar 96.
7. Dr Ross McNutt, ACSC/DEW, "Reducing Acquisition Response Time: Creating a Fast and Responsive Acquisition System, Air Command and Staff College, Maxwell AFB, Alabama.
8. *Commercial Item Handbook*, Version 1.0, Office of the Secretary of Defense for Acquisition, Technology, and Logistics (Acquisition Initiatives) Nov 01, iv.
9. Maj Gen Perry M. Smith, USAF, Retired, *Rules & Tools for Leaders*, Garden City Park, New York: Avery Publishing Group, 1998, 161.
10. "Vision and Values," National Contract Management Association, 13 Apr 03 [Online] Available: ncmahq.org/ncmadmin/mission.
11. Base-Level Acquisition Reform, PN 97-506, Executive Summary, 1997.

12. Col Barry S. Wilson, memorandum to Air Force Inspection Agency, subject: Base-Level Acquisition Reform—Special Management Review, 19 Mar 01.
13. Dr Henry Petersohn, "Performance-Based Service Contracting for Information Technology Requirements," *Contract Management,* Vol 43, No 4, Apr 03, 26-36.
14. John Ausink, Frank Camm, and Charles Cannon, "Performance-Based Contracting in the Air Force: A Report on Experiences in the Field, RAND: Project Air Force, 2001, vii-viii.
15. "AF Advantage," Electronic Government Purchase Card Initiative, 6 Mar 03 [Online] Available: afadvantage.gov/advgsa/main_pages/start_page.jsp.
16. Air Force Advantage, "Air Force ePurchase Card Concept of Operations, 22 Feb 02 [Online] Available: epc.wpafb.af.mil/current.html.

Major Looke is the commander of the 28th Contracting Squadron, Ellsworth AFB, South Dakota. At the time of the writing of this article, he was a student at the Air Command and Staff College.

("Flyaway Costs Versus Individual Components of Aircraft: An Analysis: continued from page 39)

7. Office of the Deputy Director of Defense Procurement for Cost, Pricing, and Finance, *Contract Pricing Reference Guides, Vol 2, Quantitative Techniques for Contract Pricing,* Washington, 19 Jun 00, 1.
8. Obaid Younassi, Michael Kennedy, and John Graser, *Military Aircraft Costs: The Effects of Advanced Materials and Manufacturing Processes,* Santa Monica, California: RAND, 2001, 83.
9. John A. Long, "Parametric Cost Estimating in the New Millennium," *ISPA SCEA Joint International Conference Papers*, 2000, 2.
10. *AFSC Cost-Estimating Handbook*, 6:13:1.
11. *Contract Pricing Reference Guides,* 3.
12. Nhysoft, Inc, "A Brief History of Parametric Estimating" [Online] Available: www.nhysoft.com/history.htm, 13 Aug 02.
13. Air Force Materiel Command, *AFMC—Price Estimating Suite 2000* [Online] Available: http://web2.deskbook.osd.mil/valhtml/2/2B/2B4/2B4S03.htm, Apr 01.
14. *AFSC Cost Estimating Handbook* 4:1.
15. Long, 2.
16. *AFSC Cost-Estimating Handbook,* 4:4:1.
17. Department of Defense (c), *Parametric Cost Estimating Handbook,* 14 Sep 95, 16.
18. J. L. Robbins and J.C. Daneman, "Parametric Estimating & the Stepwise Statistical Technique," *National Estimator*, Spring 1999, 14.
19. Nhysoft.
20. *AFSC Cost-Estimating Handbook,* 3:4:1.
21. *AFSC Cost-Estimating Handbook,* 3:4:3.
22. Mike Seibel, Chief, Research Section, Acquisition Cost Division, Aeronautical System Center, electronic message, Aug 02.
23. Seibel.
24. *AFSC Cost-Estimating Handbook,* 6:1.
25. Ronald Hess and H. P. Romanoff, *Aircraft Airframe Cost-Estimating Relationships,* Santa Monica, California: RAND, R-3255-AF, 1987.
26. Joy Woller, class note Chem 484, The Basics of Monte Carlo Simulations, University of Nebraska-Lincoln [Online] Available: http://www.chem.unl.edu/zeng/joy/mclab/mcintro.html, Spring 1996, 1.
27. Harold Niederreiter, *Random Number Generation and Quasi-Monte Carlo Methods*, Philadelphia: Society for Industrial and Applied Mathematics, 1992, 3.
28. Cliff T. Ragsdale, *Spreadsheet Modeling and Decision Analysis 3d Edition*, South-Western College Publishing, 2000, 567.
29. Robert Stine, class handout, "Bootstrap Resampling," ICPSR Blalock Lectures, Department of Statistics, Wharton School, 2002, 1:9.
30. Peter Hall, *The Bootstrap and Edgeworth Expansion,* New York: Springer-Verlag, 1992, 1.
31. Anthony Davison and D. Hinkle, *Bootstrap Methods and Their Applications,* New York: Cambridge University Press, 1997, 276.
32. Stine, Chap 3:11.
33. Stine, Chap 3:23.
34. Hall, 7.
35. Stine, Chap 1:6.
36. Stine, Chap 1:10.
37. Spyros Makridakis, Steven C. Wheelwright, and Rob J. Hyndman, *Forecasting Methods and Applications 3d Edition*, New York: John Wiley & Sons Inc, 1998, 213.

Captain Ritschel is deputy chief of Cost Analysis at the Standard Systems Group, Maxwell AFB, Gunter Annex. Alabama. This research, conducted while a master's student at the Air Force Institute of Technology (AFIT), Wright-Patterson AFB, Ohio, won him the SECA Outstanding Thesis award in 2003. Major Greiner is the director of the Graduate Cost Program at AFIT. Mr Reynolds is an assistant professor of mathematics at AFIT. Mr Seibel is the chief of Cost Research, Aeronautical Systems Center, Wright-Patterson.

notable quotes

DoD must reduce its logistics response times, logistics footprint, and logistics infrastructure to reengineer its logistics system to better match the warfighting concepts of the 21st century.

Paul G. Kaminski, Under Secretary of Defense for Acquisition and Technology

AIR FORCE JOURNAL of LOGISTICS

Volume XXVII,
Number 4
Winter 2003

Contacting the Journal Staff

We've relocated to temporary facilities at Maxwell AFB, Alabama, while our permanent home is undergoing rennovation. Planning is for a return to the Gunter Annex address in late 2004. Our temporary address and phone numbers are listed below.

50 Chennault Circle
Maxwell AFB AL 36112-6417
Commercial 334 953-0885/0889/0890
DSN 493-0885/0889/0890

Available Now

NEW!

In 1996, shortly after Operation Desert Strike, concern about the long-term requirements of enforcing the no-fly zones, including covering *the carrier gap,* led to the initial concept of an air and space expeditionary force. At that time, the Deputy Chief of Staff, Operations, Lieutenant General John P. Jumper, realized that transforming the Air Force to a more expeditionary footing was going to require comprehensive analytic study. The unique capabilities of both RAND Project Air Force and the Air Force Logistics Management Agency were harnessed to take on this task. *Combat Support: Shaping Air Force Logistics for the 21st Century* is a compilation of articles that communicates the essentials of the analyses completed over the last 6 years. The research was conducted to help the Air Force configure the Agile Combat Support system in order to meet AEF goals.

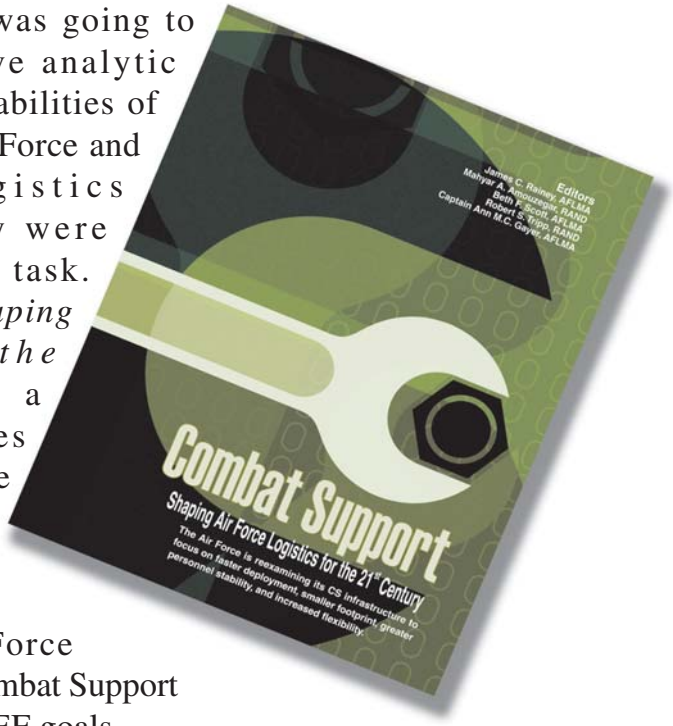

The Editorial Advisory Board selected "German Wonder Weapons: Degraded Production and Effectiveness"—written by Major Todd J. Schollars—as the most significant article to appear in Vol XXVII, No 3 of the *Air Force Journal of Logistics*.